OPTIMUM
MASCHINEN - GERMANY

VARIO SELECT

Operating manual

Version 1.2.1

Drilling machine

B30 BS Vario

22" Item No. 3021308

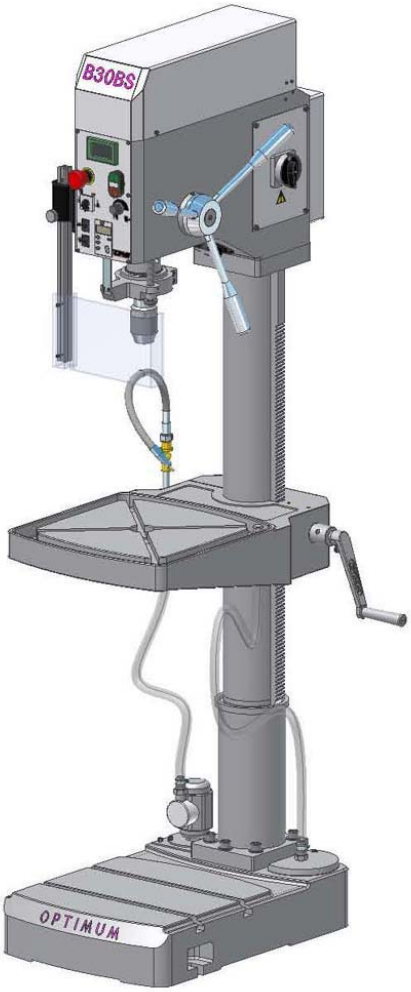

Keep for future reference!

© 2014

Table of Contents

1 Safety
1.1 Safety warnings (warning notes) 5
1.1.1 Classification of hazards 5
1.1.2 Other pictograms 6
1.2 Proper use 7
1.3 Possible dangers caused by the drilling machine 7
1.4 Qualification of employees 8
1.4.1 Target group 8
1.4.2 Authorized personnel 8
1.5 Safety measures during operation 9
1.6 Safety devices 9
1.7 Safety check 10
1.8 EMERGENCY-STOP button 11
1.9 Drilling table 11
1.10 Separating protective devices 11
1.10.1 Protective cover of the V-belts 11
1.10.2 Drill chuck guard 12
1.11 Personal protective equipment 12
1.12 Safety during operation 12
1.13 Safety during maintenance 13
1.13.1 Switching-off and securing the drilling machine 13
1.14 Use of lifting equipments 14
1.14.1 Mechanical maintenance work 14
1.15 Accident report 14
1.16 Electrical system 14

2 Technical data
2.1 Power connection 15
2.2 Drilling capacity 15
2.3 Spindle 15
2.4 Drilling table 15
2.5 Work area 15
2.6 Speeds 15
2.7 Environmental conditions 16
2.8 Operating material 16
2.9 Emissions 16
2.10 Dimensions B30 BS Vario 17

3 Assembly
3.1 Scope of delivery 18
3.2 Transport 18
3.3 Storage 19
3.4 Installation and assembly 20
3.4.1 Site requirements 20
3.4.2 Assembly 20
3.4.3 Mounting the drilling table 21
3.5 Installing 23
3.6 Mounting 24
3.6.1 Assembly drawing 25
3.7 First use 25

© 2014 US

3.7.1 Power supply 25

4 Operation

4.1 Safety 26
4.2 Control and indicating elements 26
4.2.1 Drilling machine B30BS 26
4.2.2 Drill depth stop 27
4.3 Digital drill depth display 27
4.3.1 Design 27
4.4 Troubleshooting 28
4.4.1 Control panel 28
4.5 Switching on the machine 29
4.6 Switching off the drilling machine 30
4.7 Speed change 30
4.7.1 Speed table 31
4.8 Removing and mounting of drill chucks and drill bits 32
4.8.1 Drill chuck 32
4.8.2 Removing the drill chuck 32
4.8.3 Mounting the drill chuck 34
4.9 Liquid cooling system 34
4.10 Before starting work 35
4.11 During work 35

5 Determining the cutting speed and the speed

5.1 Table cutting speeds / infeed 37
5.2 Speed table 37
5.3 Examples to calculatory determine the required speed for your drilling machine 39

6 Maintenance

6.1 Safety 41
6.1.1 Preparation 41
6.1.2 Restarting 41
6.2 Inspection and maintenance 41
6.3 Repair 44

7 Spare parts B30BS

7.1 Drilling head 1 of 4 45
7.2 Drilling head 2 of 4 46
7.3 Drilling head 3 of 4 47
7.4 Drilling head 4 of 4 48
7.5 Drilling chuck protection 49
7.6 Säule - Column 50
7.6.1 Spare parts list 51
7.7 Wiring diagram 1 of 2 57
7.7.1 Wiring diagram 2 of 2 58
7.7.2 Ersatzteilliste elektrische Bauteile - Spare parts electrical components 59

8 Troubleshooting

9 Appendix

9.1 Copyright 62
9.2 Terminology/Glossary 62
9.3 LIMITED WARRANTY 63

© 2014

1 Safety

Glossary of symbols

☞	gives further advice
➜	calls on you to get in action
❍	enumeration

This part of the operating manual

- ❍ does explain the meaning and how to use the warning references contained in this operating manual,
- ❍ does explain how to use the bench and upright drilling machine,
- ❍ highlights the dangers that might arise for you and others if these instructions are not followed thoroughly,
- ❍ informs you on how to prevent dangers.

In addition to this operating manual, please note

- ❍ applicable laws and regulations,
- ❍ legal regulations for preventing an accident,
- ❍ the prohibition, warning and mandatory signs as well as the warning notes on the bench drilling machine.

Consult OSHA, state and local regulations in order to determine compliance, danger and risks to the operator.

ALWAYS KEEP THIS DOCUMENT CLOSE TO THE DRILLING MACHINE FOR FUTURE REFERENCE.

INFORMATION

If you are unable to solve a problem using this manual, please contact us for advice:

Exclusive USA Agent

LDS Industries, LLC

930 W. National Ave.

Addison, IL 60101

Tel.: 1-630-785-6437

© 2014 US

1.1 Safety warnings (warning notes)

1.1.1 Classification of hazards

We classify the safety warnings into various levels. The table below gives an overview of the classification of symbols (pictograms) and warnings for the specific danger and its (possible) consequences.

Pictogram	Alarm expression	Definition/Consequences
	DANGER!	Threatening danger that will cause serious injury or death to people.
	WARNING!	Risk: A danger that might cause serious injury or death to a person.
	CAUTION!	Danger or unsafe procedure that might cause injury to people or damage to property.
	ATTENTION!	Situation that could cause damage to the machine and to the product and other types of damages. No risk of injury to people.
	INFORMATION	Application advice and other important or useful information and notes. No dangerous or harmful consequences for people or objects.

In the case of specific dangers, we replace the pictogram

General danger

with a warning of

injuries to hands,

hazardous electrical voltage,

or

rotating parts.

© 2014

1.1.2 Other pictograms

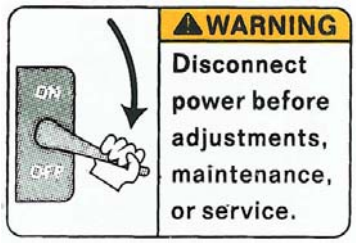

Warning of automatic start-up!

Disconnect main power!

Activation for-bidden!

Use ear protection!

Use protective boots!

Use protective gloves!

Wear a safety suit!

Protect the environment!

Use safety glasses!

Contact address

© 2014 US

1.2 Proper use

WARNING!

In the event of improper use of the drilling machine

- **there may be a risk to personnel,**
- **there may be a risk to the machine and other items,**

correct functioning of the drilling machine may be affected.

The drilling machine is designed and manufactured to be used in non-explosive environments. The drilling machine is designed and manufactured for boring holes in cold metals or other non-flammable materials or that not constitute a health hazard using a rotating cutting tool with several cutting edges.

If the drilling machine is used in any way other than described above, or modified without authorization, then the drilling machine- is being used improperly.

We do not take any liability for damages caused by improper use.

We would like to stress that any modifications to the construction, or technical or technological modifications that have not been authorized will also render the warranty null and void..

It is also part of proper use that

- the maximum values for the drilling machine are complied with,
- the operating manual is observed,
- inspection and maintenance instructions are observed.

☞ „Technical data“ on page 15

WARNING!

Very serious injury due to improper use.

It is forbidden to make any modifications or alterations to the operating values of the drilling machine! They could endanger personnel and cause damage to the machine.

1.3 Possible dangers caused by the drilling machine

The drilling machine was built using the latest technological advances.

Nonetheless, there remains a residual risk, since the drilling machine operates with

- high revolutions,
- rotating parts,
- electrical voltage and currents.

We have used construction resources and safety techniques to minimize the health risk to personnel resulting from these hazards.

If the drilling machine is used and maintained by personnel who are not duly qualified, there may be a risk resulting from incorrect or unsuitable maintenance.

INFORMATION

All personnel involved in assembly, commissioning, operation and maintenance must

- be duly qualified,
- follow this operating manual.

Due to improper use

- there may be a risk to personnel,
- there may be a risk to the drilling machine and other material property,
- the proper operation of the drilling machine may be affected.

© 2014

Disconnect the drilling machine whenever cleaning or maintenance work is being carried out.

WARNING!

The drilling machine may only be used with the safety devices activated.

Disconnect the drilling machine immediately whenever you detect a failure in the safety devices or when they are not fitted!

All additional installations carried out by the operator must incorporate the prescribed safety devices.

This is your responsibility being the operator!

☞ **„Safety devices“ on page 9**

1.4 Qualification of employees

1.4.1 Target group

This manual is addressed to

- operators,
- users,
- maintenance staff.

Therefore, the warning notes refer to both operation and maintenance of the drilling machine.

Determine clearly and make a permanent decision in who will be responsible for the different activities on the machine (operation, maintenance and repair).

Vague and unclear assignment of responsibilities constitute a safety hazard

Always disconnect the drilling machine from the main electrical power supply. This will prevent your machine from being used by unauthorized personnel.

1.4.2 Authorized personnel

WARNING!

Incorrect use and maintenance of the drilling machine constitutes a danger for personnel, objects and the environment.

Only authorized personnel may operate the drilling machine!

The only personnel authorized to use this machine and perform maintenance on it are trained and instructed technical staff working for the operator and manufacturer.

The operator must

Obligations of the operator

- train the staff,
- instruct the staff in regular intervals (at least once a year) on
  - all safety standards that apply to the bench drill and upright drill,
  - the operation,
  - accredited technical guidelines,
- check the knowledge of the staff,
- document training / instructions,
- require the staff to confirm participation in training / instructions by means of a signature,
- check if the staff is aware of safety rules and dangers in the workplace so that they observe the operating manual.

© 2014 US

The user must

Obligations of the user

- have followed a training on the operation of the drilling machine,
- know the function and performance,
- before commissioning
  - have read and understood the operating manual,
  - be familiar with all safety devices and regulations.

Further requirements to the qualification

For working on the following machine parts, additional requirements are being applied:

- Electrical parts or operating agents: shall only be performed by an electrician or under the guidance and supervision of an electrician.

Before starting work on electrical parts or operating agents, following measures are to be performed in the following order:

➜Disconnect main electrical power.

➜Ensure that the machine cannot be turned on again.

➜Check that there is no voltage.

1.5 Safety measures during operation

CAUTION!

Risk due to inhaling health hazardous dusts and mist.

Depending on the material being processed and any additional dusts and mist in the work area, conditions might impair your health.

Make sure that the generated health hazardous dusts and mist are safely removed at the point of origin and are collected and/ or filtered from the working area. Use an appropriate dust collection/ filter unit.

CAUTION!

Risk of fire and explosion by using flammable materials or cooling lubricants.

Take additional preventive measures in order to safely avoid health hazards before processing flammable materials (e.g. aluminum, magnesium) or before using flammable additives (e.g. solvents).

1.6 Safety devices

Operate the drilling machine only with properly functioning safety devices.

Stop the drilling machine if there is a failure in the safety device or if it is not functioning for any reason.

It is your responsibility!

If a safety device has not been activated or has failed, the drilling machine must only be used when

- the cause of the failure has been removed,
- it has been verified that there is no resulting danger for personnel or objects.

WARNING!

If you bypass, remove or override a safety device in any other way, you are endangering yourself and other staff working with the drilling machine. The possible consequences are

- **injuries due to components or parts of components flying off a high speed,**
- **contact with rotating parts,**

© 2014

- **fatal electrocution.**

WARNING!

The separating protective equipment which is made available and delivered together with the machine is designed to reduce the risk of workpieces or fractions of them which being expelled, but not to remove them completely.

The drilling machine includes the following safety devices:

- an EMERGENCY-STOP button
- a drilling machine table with T-slots to fasten the workpiece or a vice,
- a protective cover for the pulleys with limit switch,
- a drill chuck guard with limit switch.

1.7 Safety check

Check the drilling machine at least once per shift. Inform the person responsible immediately of any damage, defect or change in operating function.

Check all safety devices

- at the beginning of each shift (with the machine stopped),
- once a week (with the machine in operation),
- after every maintenance and repair operation.

Check the prohibition, warning and information labels and the markings on the drilling machine

- can be identified (if not, clean them)
- are complete.

INFORMATION

Use the following overview to organize the inspections.

General check		
Item	**Inspection**	**OK**
Protective covers	Mounted, firmly bolted and not damaged.	
Labels, markings	Installed and legible.	
Date:	**Inspector (signature):**	

Functional test		
Item	**Inspection**	**OK**
EMERGENCY-STOP push button	Once the emergency stop button is activated, the drilling machine should be switched off.	
Limit switch protective cover V-belts	The drilling machine must not switch on, if the protective cover of the V-belts is opened.	
Drill chuck guard	The drilling machine must only be switched on, if the drill chuck guard is closed.	
Date:	**Inspector (signature):**	

© 2014 US

1.8 EMERGENCY-STOP button

CAUTION!

After actuating the EMERGENCY-STOP button, the drill spindle will turn for a few seconds more, depending on the previously selected speed.

.

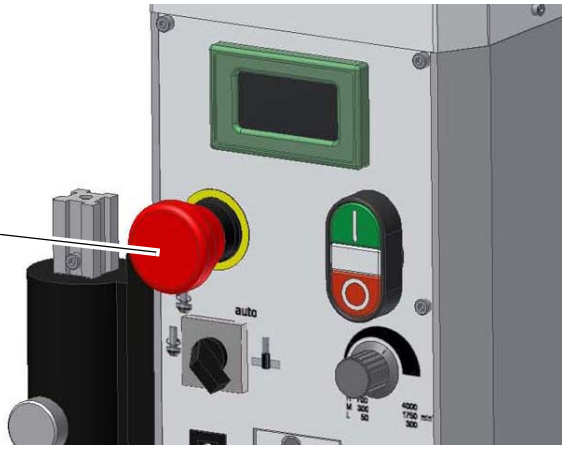

Img.1-1: EMERGENCY-STOP

1.9 Drilling table

The drilling table is equipped with T-slots for clamping blocks.

WARNING!

Risk of injury due to parts flying off at high speed. Securely fix the workpiece on the drilling table.

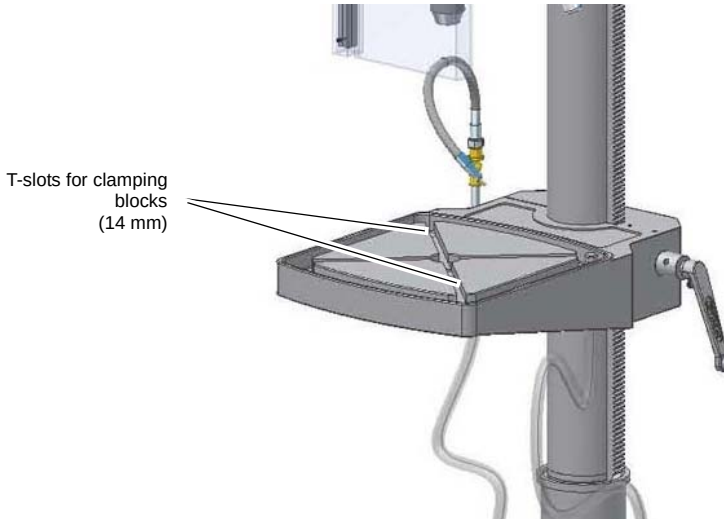

Img.1-2: Drilling table

1.10 Separating protective devices

1.10.1 Protective cover of the V-belts

A protective cover for the belt pulleys is mounted on the drilling head. A switch is integrated in the protective cover which monitors that the cover is closed.

INFORMATION

YOU CANNOT START THE MACHINE IF THE PROTECTIVE COVER IS NOT CLOSED.

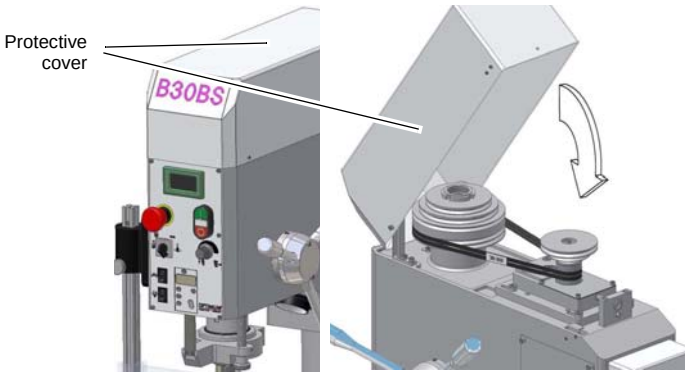

Img.1-3: Protective cover

© 2014

1.10.2 Drill chuck guard

Adjust the drill chuck guard to the correct height before you start working.

To do so, detach the clamping screw, adjust the required height and retighten the clamping screw.

A switch is integrated in the drill chuck guard which monitors that the cover is closed.

INFORMATION

YOU CANNOT START THE MACHINE IF THE DRILL CHUCK GUARD IS NOT CLOSED.

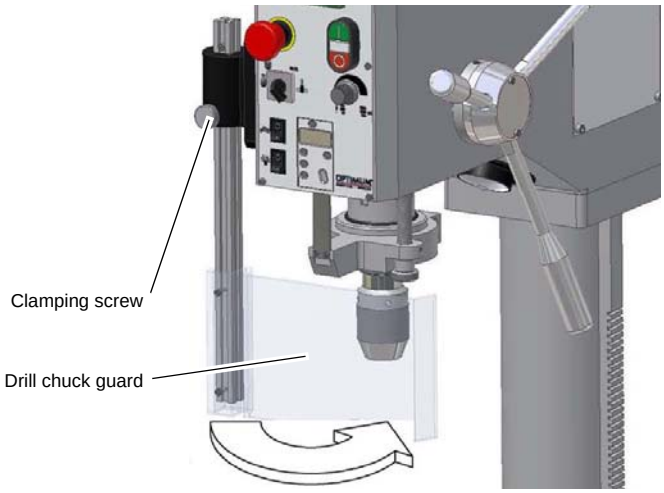

Img.1-4: Drill chuck guard

1.11 Personal protective equipment

For certain work, personal protective equipments is required. Such as:

- Safety helmet,
- Safety glasses or face guard,
- Protective gloves,
- Safety shoes with steel toe caps,
- Ear protection.

Before starting work, make sure that the prescribed personal protective equipment is available at the workplace.

CAUTION!

Dirty or contaminated individual protection gear can cause disease.

Clean your individual protection gear

- **after each use,**
- **regularly, at least once a week.**

Personal protective equipment

Protect your face and your eyes: Wear a safety helmet with a face guard for every work, especially for the kind of work where your face and eyes are exposed to hazards.

Use protective gloves when lifting or handling pieces with sharp edges.

Wear safety shoes when fitting, dismantling or transporting heavy components.

1.12 Safety during operation

In the description of work with and on the drilling machine we highlight the dangers specific to that work.

© 2014 US

WARNING!

Before activating the drilling machine, double-check that

- **staff will not be endangered,**
- **no damage is caused to equipment.**

Avoid unsafe working practices:

- Make sure your work does not endanger anyone.
- The instructions in this manual need to be observed during assembly, handling, maintenance and repair.
- Do not work on the drilling machine if your concentration is reduced, for example, because you are taking medication.
- Observe the rules for preventing accidents issued by your association for the prevention of occupational accidents and safety in the workplace or other inspection authorities.
- Inform the inspector of any danger and failure.
- Stay at the drilling machine until all rotating parts have come to a halt.
- Use prescribed protection gear. Make sure to wear a well-fitting work suit and, where necessary, a hairnet.
- Do not use protective gloves during drilling work.

1.13 Safety during maintenance

Inform the operating staff in good time of any repair and maintenance work.

Report all safety-relevant changes or performance details of the drilling machine. Document all changes, have operating manual changed accordingly and train the machine operators.

1.13.1 Switching-off and securing the drilling machine

Turn the drilling machine off using the main switch and secure the main switch and use a padlock to prevent the switch from being turned on without authorization or by accident. Keep the key in a safe place.

All machine components and hazardous voltages are disconnected. Only the points marked with this pictogram are not included

© 2014

1.14 Use of lifting equipments

WARNING!

Use of unstable lifting and load-suspension gear that might break under load can cause very serious injuries or even death.

Check the lifting and load-suspension gear on

- **sufficient load capacity,**
- **perfect condition.**

Observe the regulations for the prevention of accidents issued by your association for the prevention of occupational accidents and safety in the workplace or other inspection authorities.

Fasten the loads properly. Do not walk under lifted loads!

1.14.1 Mechanical maintenance work

Remove all protection and safety devices before starting maintenance work and re-install them once the work has been completed, such as:

- ❍ Covers,
- ❍ Safety indications and warning signs,
- ❍ Earth (ground) cables.

If you remove protection or safety devices, refit them immediately after completing the work. Check if they are working properly!

1.15 Accident report

Inform your superiors and LDS Industries immediately in case of accidents, possible sources of danger and any action which almost lead to an accident "Near misses".

"Near misses" may have many possible causes.

The sooner they are notified, the faster these causes can be eliminated.

1.16 Electrical system

Have the machine and / or the electrical equipment checked regularly, at least every six months.

Eliminate immediately all defects such as loose connections, defective wires, etc.

A second person must be present during work on live components, to disconnect the power in case of an emergency.

Disconnect the drilling machine immediately if there is a malfunction in the power supply!

☞ „Maintenance“ on page 40

© 2014 US

2 Technical data

The following information gives the dimensions and weight and is the manufacturer‘s authorized machine data.

2.1 Power connection	B30 BS Vario
Total connection rate	3 HP, 230V, 60Hz, 1 Ph
Cooling pump	40W, 230V, 60Hz

2.2 Drilling capacity	B30 BS Vario
Drilling capacity in steel	30mm (1.181“)
Throat	285mm (11.22")
Spindle travel	125mm (4.921")

2.3 Spindle	B30 BS Vario
Spindle taper	3 MT

2.4 Drilling table	B30 BS Vario
Table size Length x Width	400 mm (15.75“) x 500 (19.69")
T-slot size	14 (.551“)
Max. distance spindle - table	780 (30.71")
Max. distance spindle - base	1230 (48.43")
Working surface base Length x Width of the working surface	270 (10.63“) x 390 (15.35")

2.5 Work area	B30 BS Vario
Height	2500 (98.43")
Depth	1700 (66.93")
Width	1500 (59.06")

2.6 Speeds	B30 BS Vario			
Number of steps	1	2	3	4
Spindle speed [rpm]	30 - 300	120 - 1200	240 - 2400	390 - 3900
Turning moment max. [Nm]	100	25	13	6

© 2014

2.7 Environmental conditions	B30 BS Vario
Temperature	41 - 95 °F
Rel. humidity	25 - 80 %

2.8 Operating material	B30 BS Vario
Rack	commercial lubricating grease
Step-down gear	Mobilgrease OGL 007 or, Mobilux EP 004, or Mobil XHP
Column, blank steel parts	acid-free lubricant, e.g. machine oil, engine oil
Coolant lubricant	UNIMET ASF 192, Mineral 1:10 (approx. 4.5 liters / 4.75 quarts)

2.9 Emissions

The noise level emission of the drilling machine ranges below 72 dB(A). If the drilling machine is installed in an area where various machines are in operation, the acoustic influence (emission) on the operator of the drilling machine may exceed 85 dB(A) in the working area.

INFORMATION

This numeric value had been measured on a new machine under conventional operating conditions. Depending on the age or wear of the machine, the noise behavior of the machine might change.

Furthermore, the extent of the noise emission is also depending on manufacturing influence factors, such as speed, material and clamping conditions.

INFORMATION

The mentioned numerical value is an emission level and not necessarily a safe working level.

Unless the degree of noise emission and the degree of noise disturbance are depending on one another it is not possible to use it in order to reliably determine if it is necessary to take further preventive measures or not.

The following factors influence the actual degree of the noise disturbance of the operator:

- Characteristics of the working chamber, e.g. size or damping behavior**,**
- Other noise sources, e.g. the number of machines,
- Other processes proceeding nearby and the period during which the operator is exposed to the noise.

Consult OSHA, state and local regulations in order to determine compliance, dangers and risks to the operator.

CAUTION!

The machine operator has to wear an appropriate ear protection depending on the overall stress caused by noise and on the basic limit values.

We generally recommend using a sound and ear protection.

© 2014 US

2.10 Dimensions B30 BS Vario

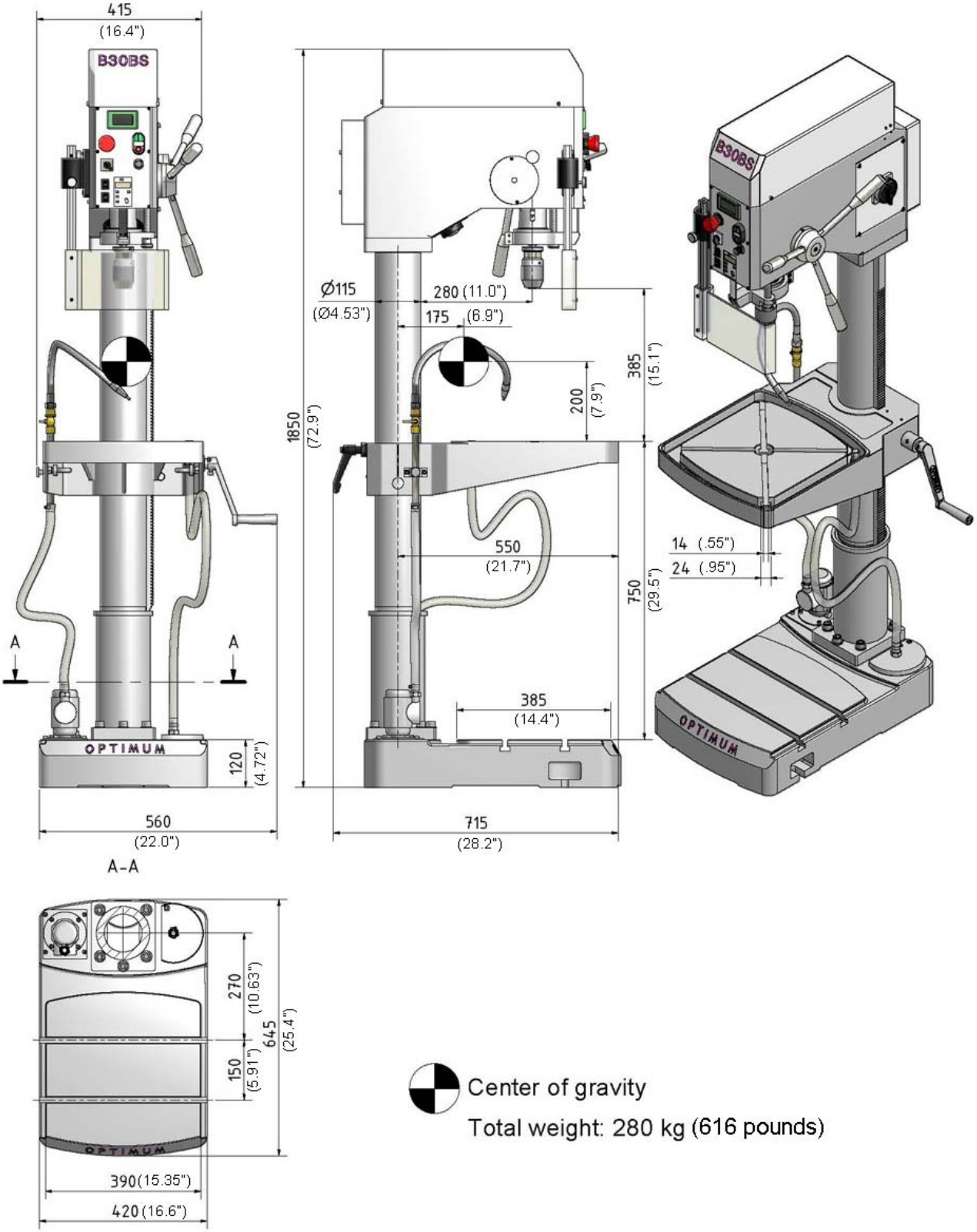

Img. 2-1: Dimensions B30BS Vario2014

© 2014

3 Assembly

3.1 Scope of delivery

When the machine is delivered, check immediately that the machine has not been damaged during transport and that all components are included. Compare the parts supplied with the information on the packaging list.

3.2 Transport

- Center of gravity

- Attachment positions (marking the positions for the attachment position gear)

- Prescribed transport position (marking the top side)

- Means of transportation to be used
- Weights

WARNING!

Machine parts falling off forklift trucks or other transport vehicles could cause very serious or even fatal injuries. Follow the instructions and information on the transport case.

WARNING!

Use of unstable lifting equipment and load-suspension devices that break under load can cause very serious injury or even death.

Check that the lifting and load-suspension gear has sufficient load capacity and that it is in perfect condition. Observe the rules for preventing accidents issued by your association for the prevention of occupational accidents and safety in the workplace or other inspection authorities.

Hold the loads properly. Never walk under suspended loads!

© 2014 US

3.3 Storage

ATTENTION!

Improper storage may cause important parts to be damaged or destroyed.
Store packed or unpacked parts only under the following ambient conditions.
Please follow the instructions and indications on the transportation box.

- Fragile goods (goods require careful handling)

- Protect against humidity and humid environments

☞ „Environmental conditions“ on page 16.

- Prescribed position of the packaging box (marking the top side – arrows pointing upward)

- Maximum stacking height

  Example: non-stackable – do not pile any further packaging boxes on top of the first packaging box

© 2014

3.4 Installation and assembly

3.4.1 Site requirements

Organize the working space around the drilling machine according to the local safety regulations.

INFORMATION

In order to provide for good functionality and high machining accuracy as well as long durability of the machine the site should fulfill certain criteria.

Observe the following items:

- The device must only be installed and operated in dry ventilated places.
- Avoid places nearby machines generating chips or dust.
- The site has to be vibration-free, i.e. at a distance from presses, planing machines, etc.
- The substructure has to be appropriate for drilling machine. Also make sure that the load bearing capacity and the evenness of the floor are appropriate.
- The substructure has to be prepared in a way that possibly used coolant cannot penetrate into the ground.
- Protruding parts such as stops, handles, etc. need to be secured by measures provided by the customer if necessary in order to avoid dangers for persons.
- Provide sufficient space for assembly and operating staff as well as for material transport.
- Also allow for accessibility for setting and maintenance works.
- Make sure that the mains plug of the turning machine is freely accessible.
- Provide for sufficient illumination (minimum value: 47 Lumens/ft², measured at the tool tip). In case of insufficient intensity of illumination provide for additional illumination i.e. by a separate workplace illuminator.

INFORMATION

The mains plug of the drilling machine has to be freely accessible.

3.4.2 Assembly

WARNING!

Danger of crushing when assembling and installing the machine components.

Fitting the machine base and the drill column

➜ Place the machine base on the ground and attach the column on the base.
Hexagon socket screws are provided to fix the base.

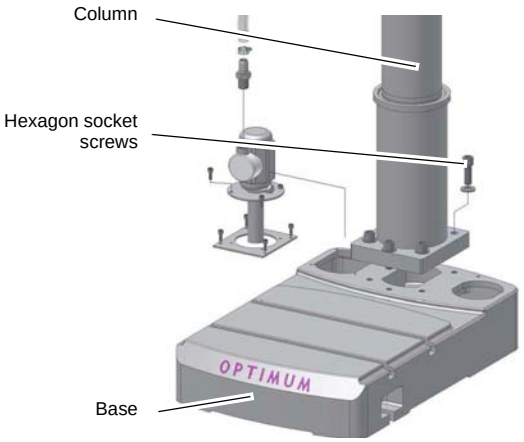

Img.3-1: Assembling column

© 2014 US

3.4.3 Mounting the drilling table

- ➜ Push the rack into the drilling table.
- ➜ Adjust the rack within the drilling table in a way that the teeth of the rack came in with the worm gear of the drilling table.
- ➜ Push the drilling table with rack on the drilling column.

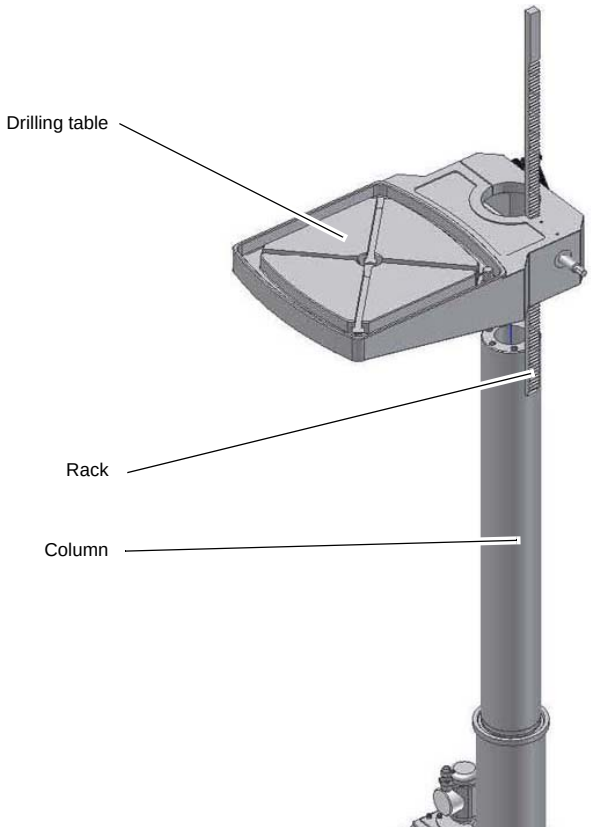

Img.3-2: Assembling drilling table

- ➜ Mount the spacer.
- ➜ Mount the crank handle for the height-adjustment of the drilling table.
- ➜ Secure the crank handle and the spacer with the locking screws and with the hexagon socket screws, respectively.

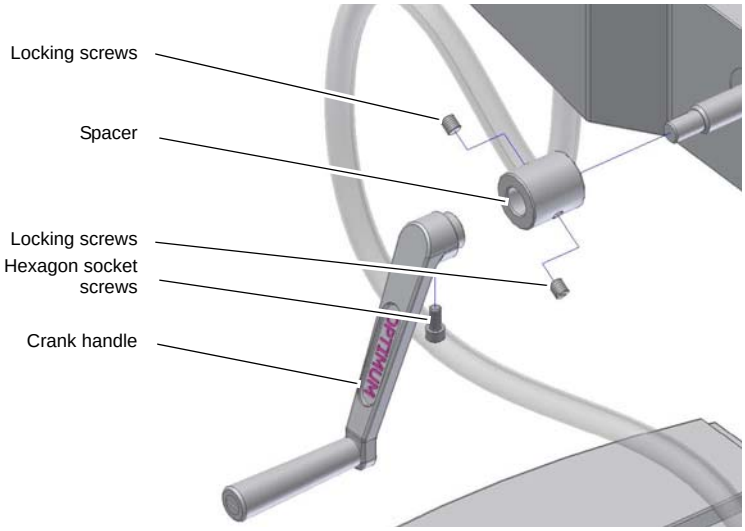

Img.3-3: Assembly crank handle

© 2014

➜ Mount bushing, axial bearing and clamping lever.

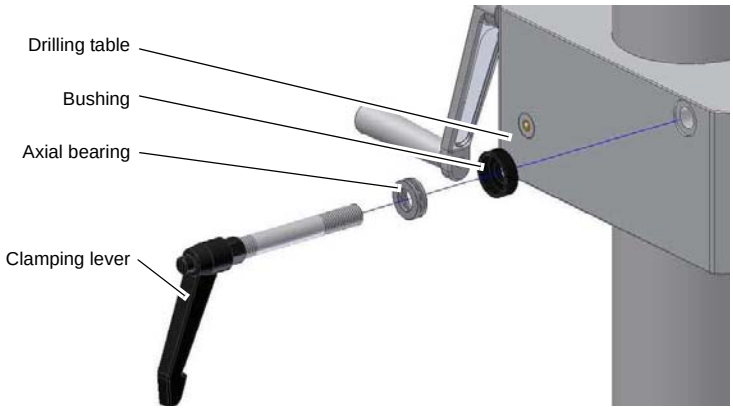

Img.3-4: Assembling drilling table

➜ Mount cooling equipment.

➜ Mount all cooling agent hoses and fasten you these with the hose clamps.

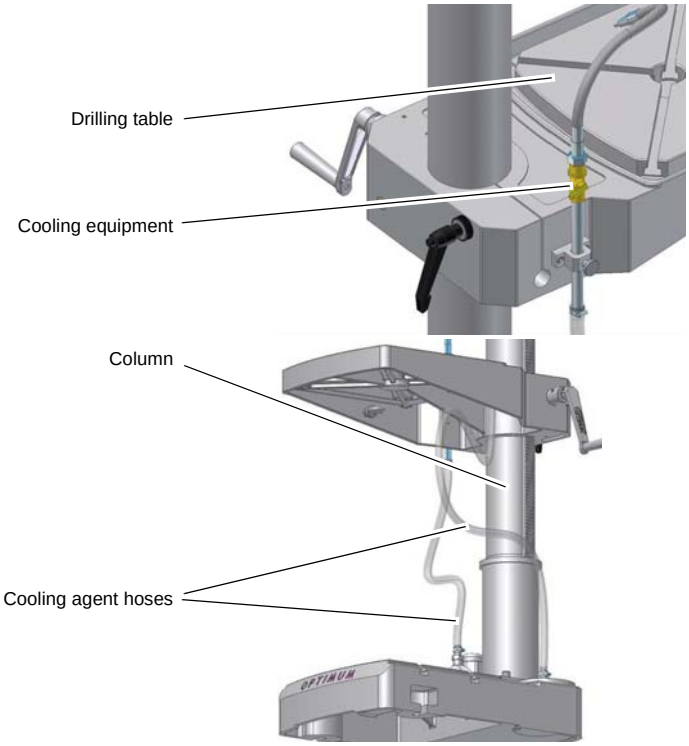

Img.3-5: Assembly drilling table

© 2014 US

Mount the drilling head

- Put the intermediate plate on the drilling column.
- Secure the intermediate plate with the cap screws on the drilling column.
- Put the drilling head on the intermediate plate and turn it until it aligns with the base.
- Secure the drilling head with the cap screws on the intermediate plate.

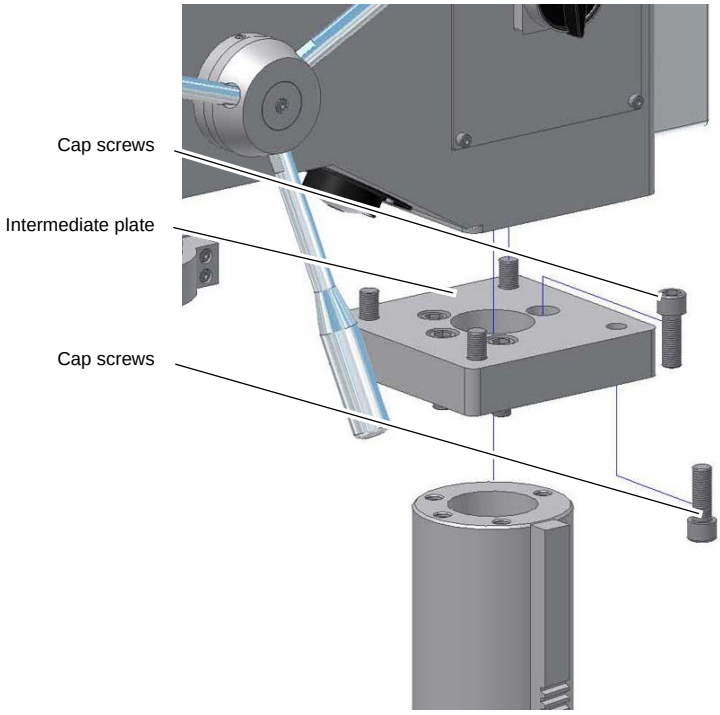

Img.3-6: Assembling drill head

3.5 Installing

- Check the horizontal orientation of the base of the drilling machine with a level.
- Check that the foundation has sufficient floor-load capacity and rigidity. The total weight amounts to 616 pounds.
- Position the drilling machine on the intended foundation.
- Attach the drilling machine using the provided recesses in the machine base.

WARNING!

The quality of the foundation and the mounting method of the machine base to the foundation has to assimilate the loads of the machine. The foundation needs to be even. Please check the horizontal alignment of the foundation of the machine with a level.

© 2014

3.6 Mounting

In order to provide for the necessary stability of the drilling machine it is necessary to firmly bolt the base of the machine to the foundation. We recommend you to use compound anchor cartridges or heavy duty anchors.

➜ Secure the drilling machine to the foundation using the provided through-holes on the base.

The through-holes are marked with arrows on the machine base.

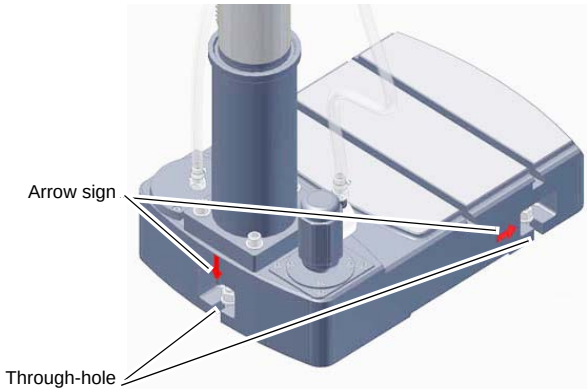

Img. 3-7: Labeling of the anchor points on drilling machine

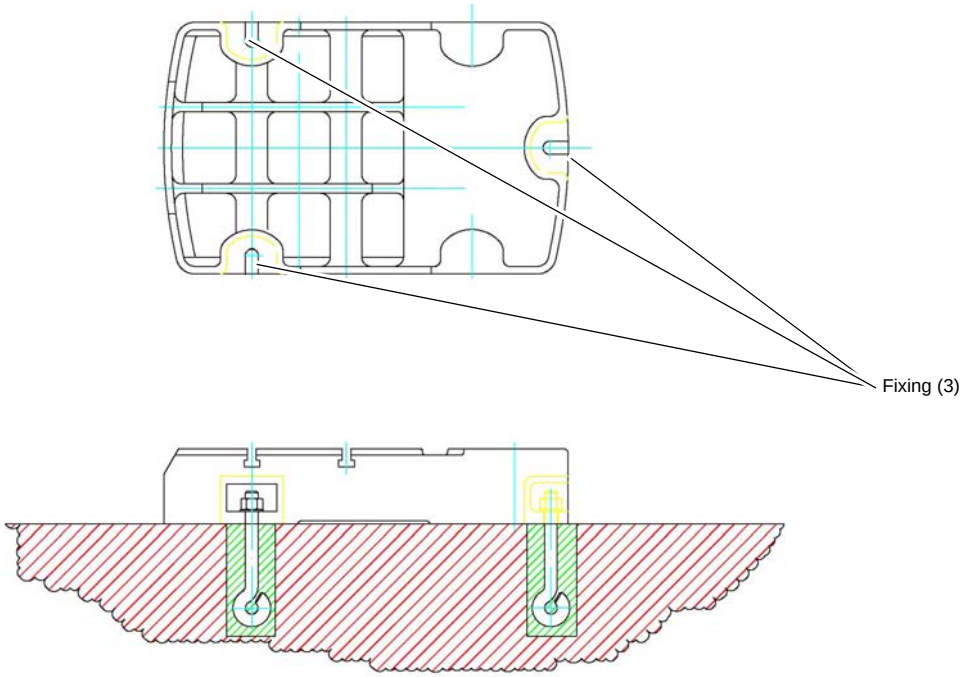

Img. 3-8: Attachment to the foundation

ATTENTION!

Tighten the anchor bolt nuts in the drilling machine until it is firmly secured and can neither move during operation nor be overturned.

If the anchor bolt nuts are too tight and the foundation is uneven, the geared drill's base may break.

© 2014 US

3.6.1 Assembly drawing

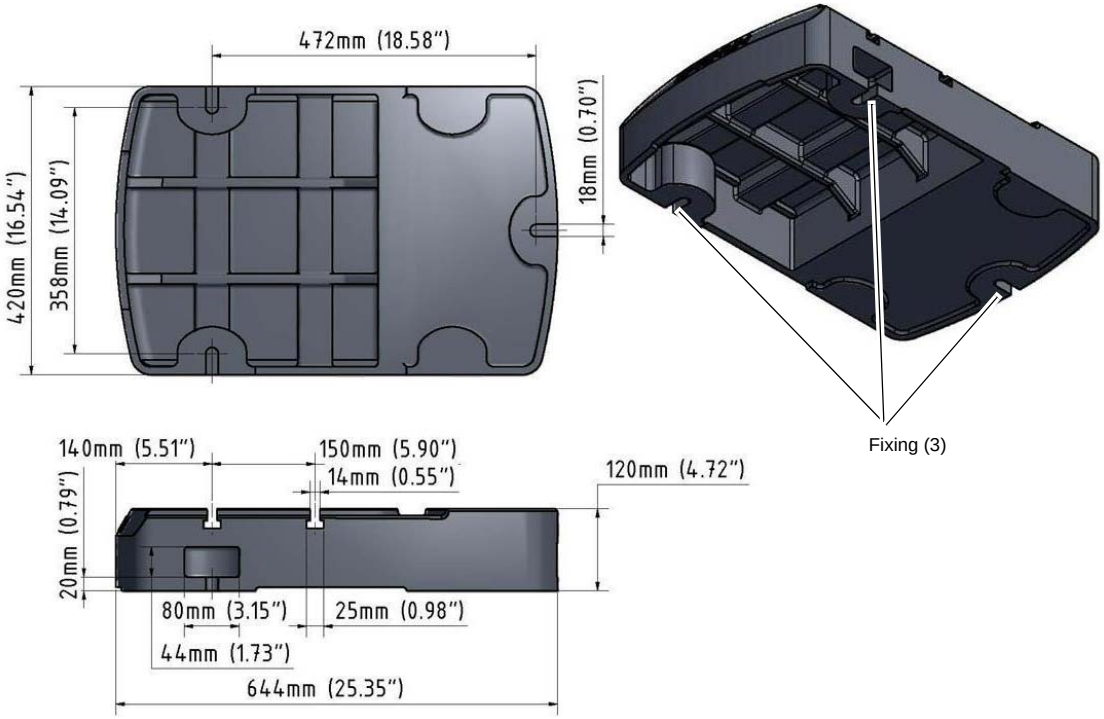

Img. 3-9: B30 BS

3.7 First use

WARNING!

Risk by using improper workpiece clamping materials or by operating the machine with inadmissible speed.

Only use the clamping materials (e.g. drill chuck) which had been delivered together with the machine or as optional equipment offered by OPTIMUM.

Use the working clamping materials only in the provided admissible speed range.

Workpiece clamping materials must only be modified according to the recommendations of OPTIMUM or of the clamping material manufacturer.

WARNING!

Personnel and equipment may be endangered if the drill first used by inexpert personnel.

We do not take liability for damage caused by incorrect commissioning.

☞ „Qualification of employees“ on page 8

3.7.1 Power supply

➜ Connect the electrical feeder.

➜ Check the fuse protection (fuse) of your electrical supply according to the technical specifications for the total connected load of the drilling machine.

© 2014

4 Operation

4.1 Safety

Use the machine only under the following conditions:

- The machine is in proper working order.
- The machine is used as prescribed.
- The operating manual is followed.
- All safety devices are installed and activated.

All problems should be eliminated immediately. Stop the machine immediately in the event of any problem in operation and make sure it cannot be started up accidentally or without authorization.

Notify the person responsible immediately of any modification.

☞ „Safety during operation“ on page 12

4.2 Control and indicating elements

4.2.1 Drilling machine B30BS

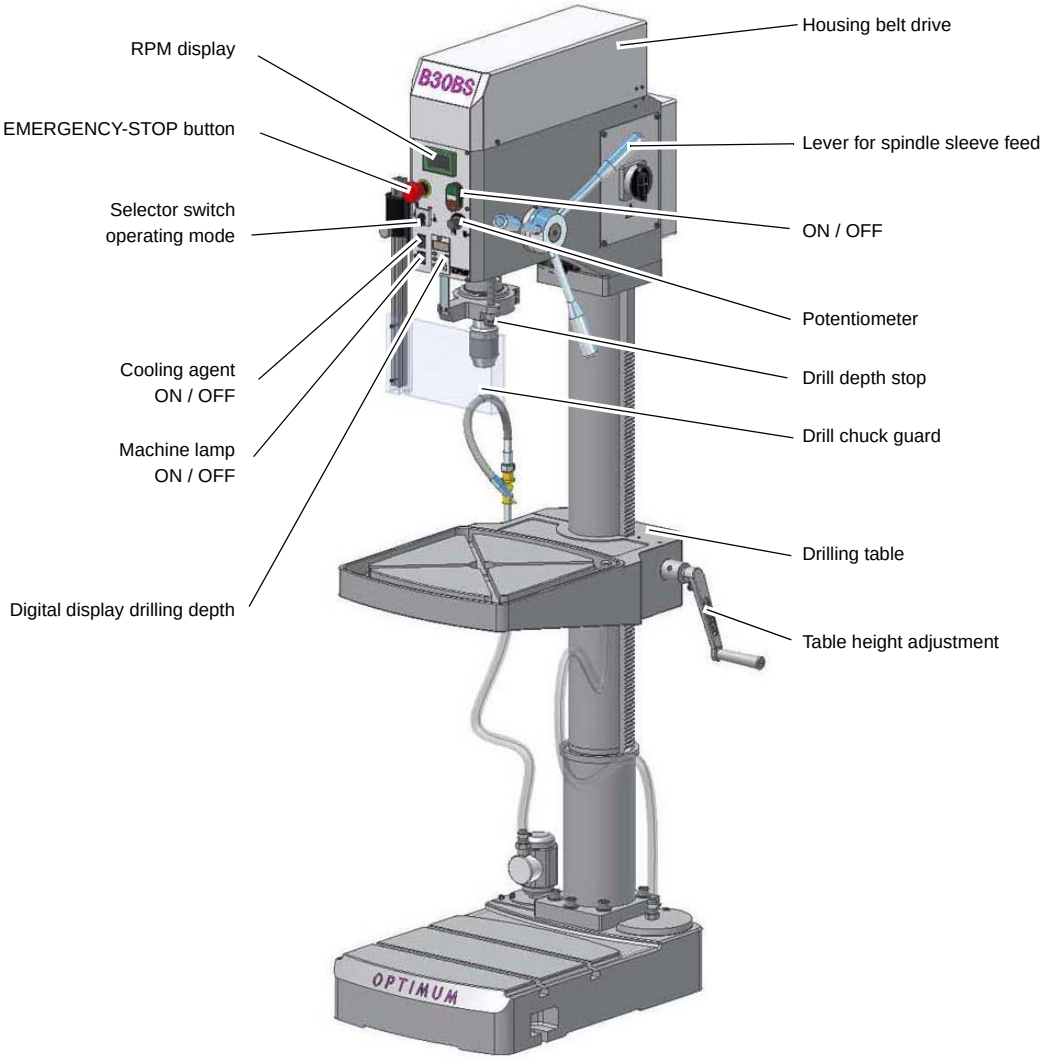

Img.4-1: B30 BS Vario

© 2014 US

4.2.2 Drill depth stop

When drilling several holes of the same depth you can use the drill depth stop.

➜ Adjust the required drilling depth by means of the digital display and the adjusting screw.

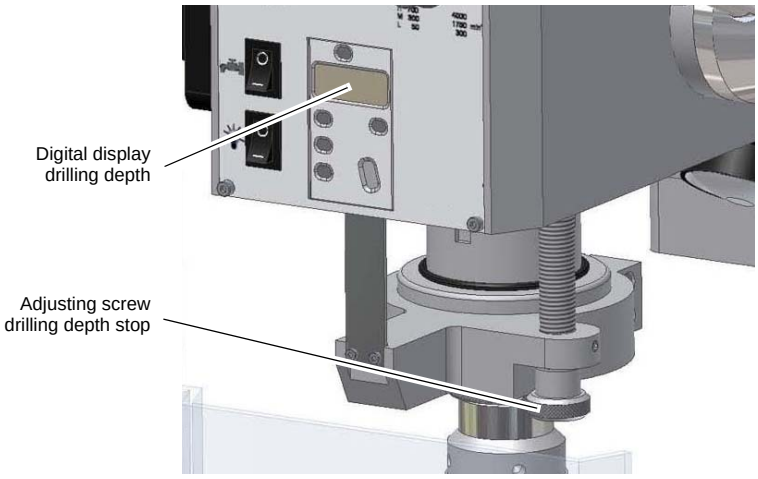

Img. 4-2: Drilling depth stop

4.3 Digital drill depth display

Measuring range	mm	0 - 999.99
	inch	0 - 39.371“
Reading precision	mm	0.01
	inch	0.0004“
Power supply		Battery, button cell 1.55V 145mAh (SR44) 11.6 x 5.4mm

4.3.1 Design

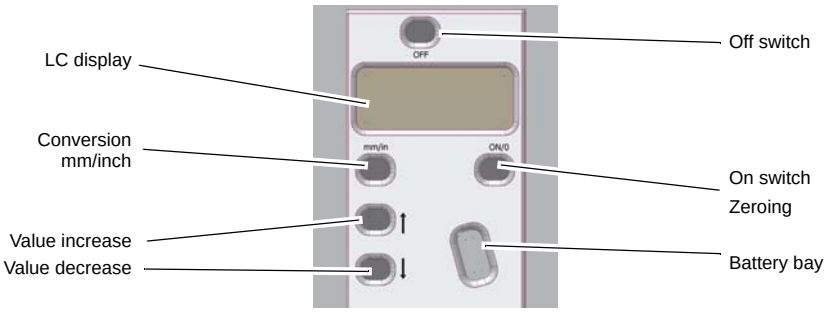

Img. 4-3: Digital display

- ON / O,
  switches the display on and resets the reading of the display to "0".
- mm/in,
  converts the measuring unit from *millimetres* to *inches* and vice versa.
- OFF,
  switches the display off.
- ↑,
  performs a value increase.
- ↓,
  performs a value decrease.

© 2014

INFORMATION

Before inserting the new battery, wait about 30 seconds. Please make sure, that the contacts are metallically bright and free from coverings which result from bleeding or gassing batteries. Grip the new batteries only with plastic forceps, if possible not with the hand due to the formation of oxide and never with metal forceps in order to avoid a short circuit. In most cases the round cell will be inserted into the digital display with the marking upside. After inserting the round cell, the battery compartment has to be closed again.

4.4 Troubleshooting

Problem	Possible cause	Solution
Flashing display	• Voltage too low	• Change battery
Screen does not refresh	• Disturbance in the circuit	• Remove the battery, wait 30 seconds and re-insert the battery
No data visible	• No power supply • Battery voltage less than 1.55V	• Clean battery contacts • Replace battery

4.4.1 Control panel

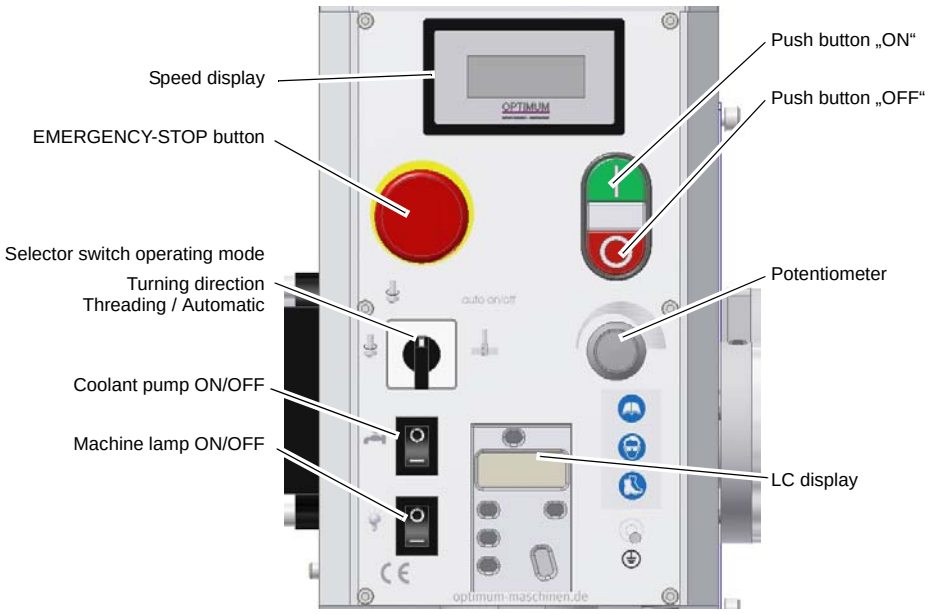

Img.4-4: Operating element on the control panel

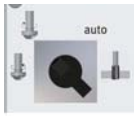

Selector switch operating mode

With the selector switch the operating mode „Auto, threading or right-hand respectively left-hand run“ is being selected.

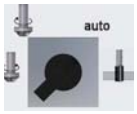

Operating mode „Auto“

In the automatic mode the motor starts up according to a predefined path over the drilling depth stop of the shaft automatically and will stop at the final position. This way for, the push button Start and Stop does not have to be actuated for repetitve drilling tasks.

© 2014 US

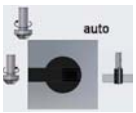

Operating mode threading

In the threading mode the motor automatically starts up according to a predefined path over the drilling depth stop and changes automatically the drilling direction as soon as the predefined depth is being achieved. The screw tap exits the workpiece.

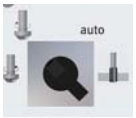

Switch for the turning direction

Standard operation, selection right-handed or left-handed rotation.

Potentiometer

Speed setting "VARIO"

Push button ON

The „push button ON“ will start up the rotation of the drill spindle.

Push button OFF

The „push button OFF“ switches off the rotation of the drill spindle.

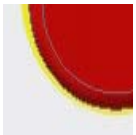

Coolant pump ON / OFF

Switches the coolant pump ON or OFF.

Machine lamp ON / OFF

Switches the illumination ON or OFF.

Operating control lamp

The operating control lamp on the operating panel has to flash.

Main switch

Interrupts or connects the power supply.

4.5 Switching on the machine

➜ Switch on the main switch.

➜ Select sense of rotation.

➜ Actuate the push button „ON“.

© 2014

4.6 Switching off the drilling machine

➜ Actuate the "push button OFF“.

➜ In case of long standstill of the machine, switch it off with the main switch.

4.7 Speed change

WARNING!

Danger due to drill chuck or tools flying off at high speed. Make sure not to exceed the maximum speed of the drill chuck when setting the spindle speed.

In order to change the speed range of your drilling machine, lift the protective cover of the V-belts:

➜ Switch off the machine by pressing the main switch.

➜ Open the protective cover.

❍ To do so, loosen the lateral screws of the protective cover of the V-belts.

❍ Completely loosen the screws at the rear side.

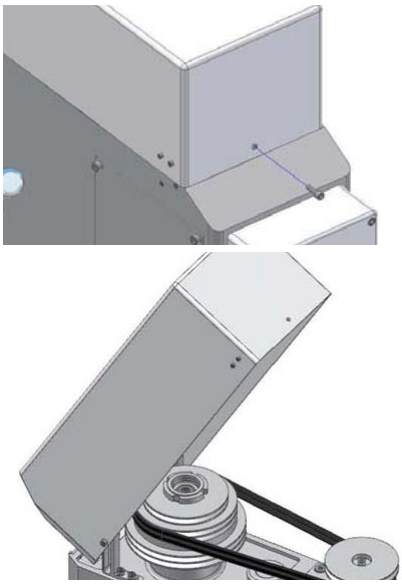

Fig. 4-5: Protective cover

➜ Plug the lever on the provided seat of the tensioning device and twist it in order to secure it against slipping out.

➜ Release the V-belt by turning the lever to the left (refer to the figure “RELEASED“).

➜ Position the V-belt respectively the V-belts on the required transmission stage.

➜ Clamp the V-belt by turning it to the right (refer to the figure “TENSIONED“).

➜ Disassemble the lever of the V-belt tensioning.

➜ Close the protecive cover and screw it on.

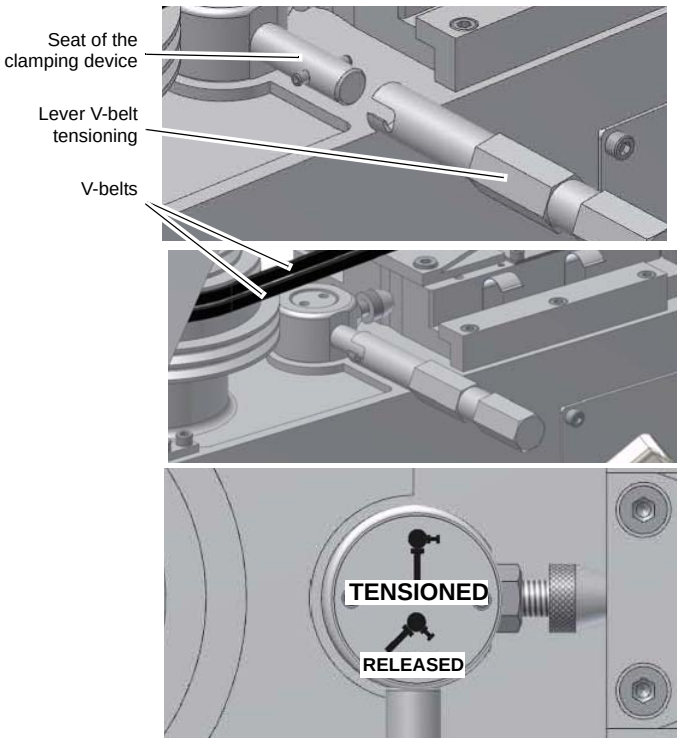

Fig. 4-6: Lever V-belt tensioning

© 2014 US

4.7.1 Speed table

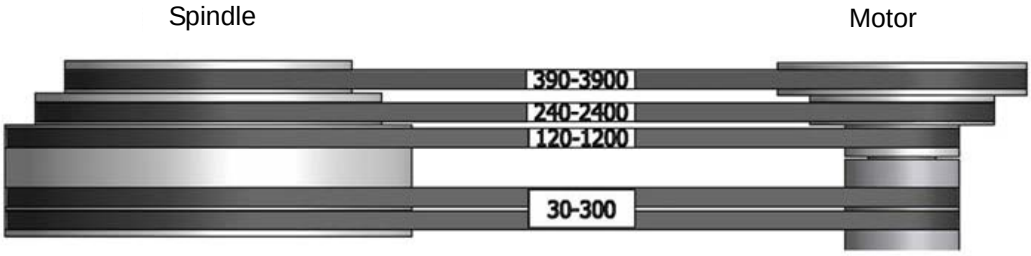

Img. 4-7: Speed table

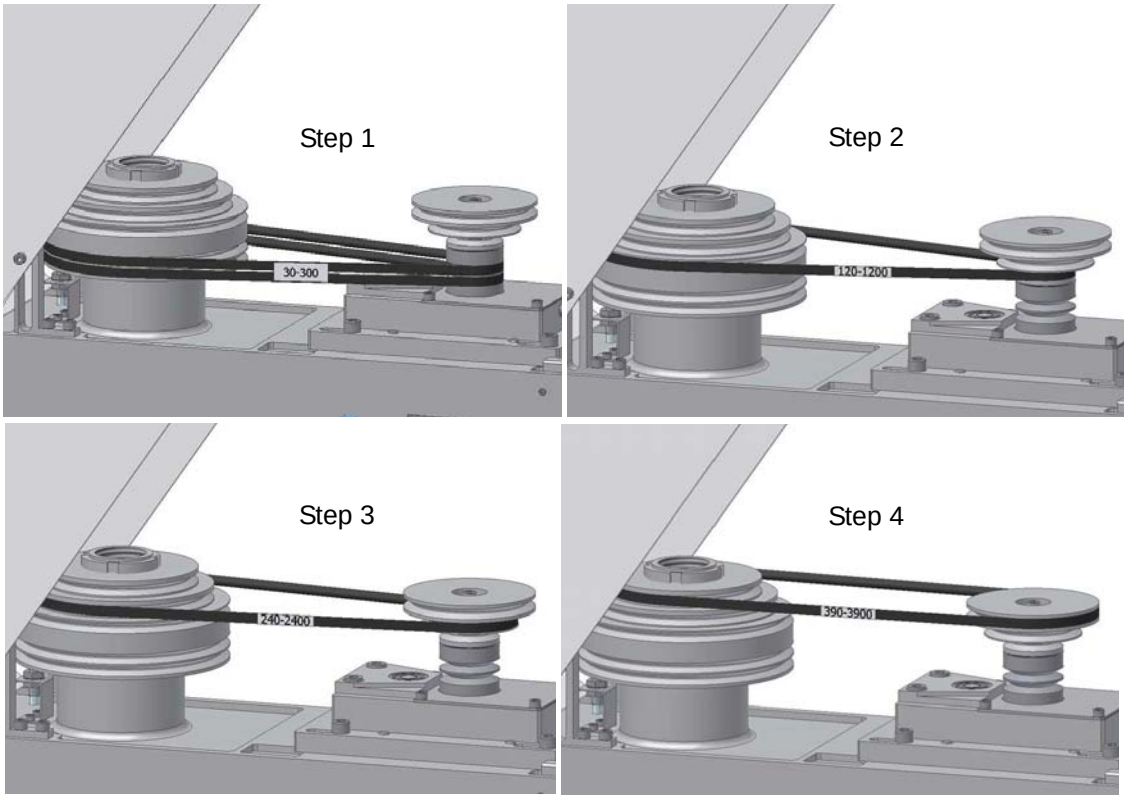

Img. 4-8: Steps table

INFORMATION

Only one V-belt is required in the speed range from 120 to 1200 rpm, 240 to 2400 rpm and 390 to 3900 rpm.

☞ **„Determining the cutting speed and the speed“ on page 34**

© 2014

4.8 Removing and mounting of drill chucks and drill bits

4.8.1 Drill chuck

In order to clamp a drill bit, hold the upper part of the drill chuck and turn the bottom part.

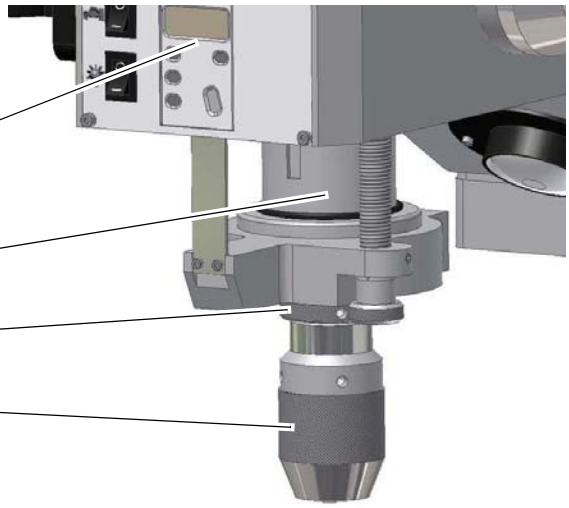

Img.4-9: Drill chuck

CAUTION!

Make sure that the clamped tool is firmly and correctly fitted.

4.8.2 Removing the drill chuck

The drill chuck and the morse taper are released from the drill spindle with the aid of a drift.

WARNING!

Do not remove the drill chuck until the drill has been disconnected from the power supply.

- ➜ Switch the drilling machine off with the main switch or disconnect the main power.
- ➜ Move the drill sleeve down.
- ➜ Turn the drill spindle so that the opening at the drill sleeve coincides with the opening at the drill spindle.
- ➜ Loosen the morse taper of the drill chuck with the help of a drift.

© 2014 US

Removing the tool or drill chuck with integrated drill drift

CAUTION!

Hold the tool ③ or the drill chuck.

With the below described procedure the morse taper is being loosened from the drill spindle. The tool and/or the drill chuck will fall down.

CAUTION!

Do not try to expel the tool when it is in the intermediate position. This might cause damages of the integrated drill drift or of the feed handle.

With the below described procedure the morse taper will be released from the drill spindle.

➜ Move the spindle down until the locking pin ① can be moved a little bit (Img. 4-11 (b) intermediate position).

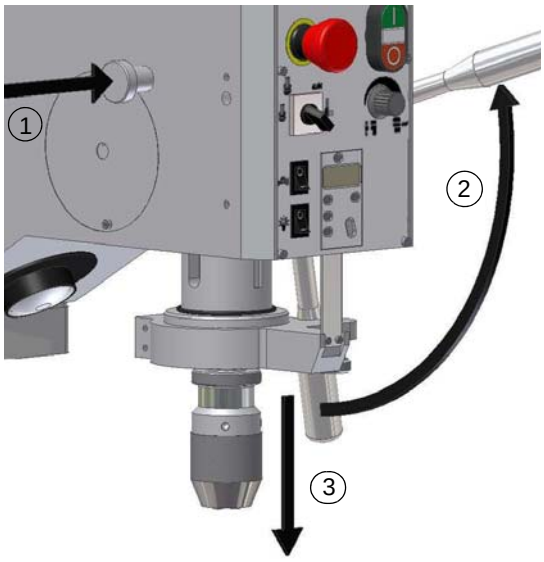

Img.4-10: Disassembly

➜ Move the locking pin ① so far, until the locking pin engages completely (Img. 4-11 (c) expulsion position).

➜ Press the spindle lever ② upward.

❍ The morse taper will be pressed out of the drill spindle.

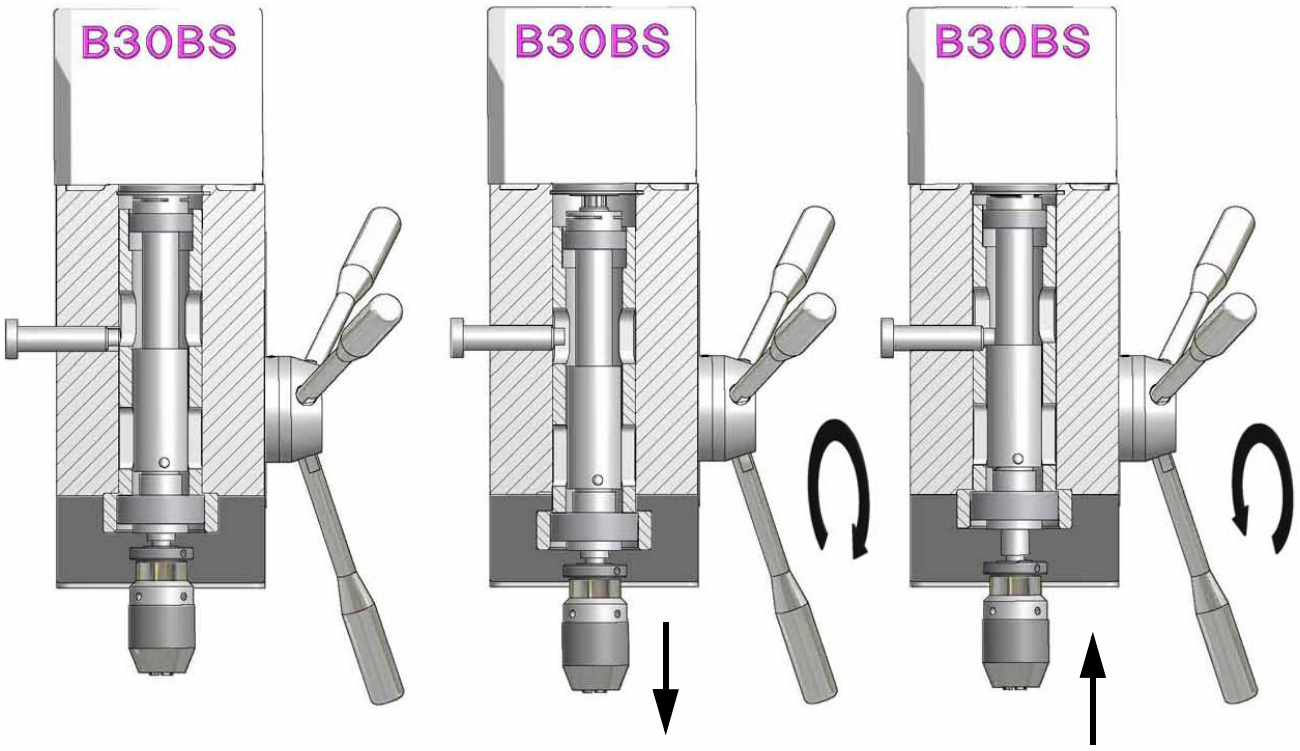

a) home position b) intermediate position c) expulsion position

Img.4-11: Functional diagram of the drill drift (sectional view)

© 2014

4.8.3 Mounting the drill chuck

The drill chuck is secured through a form-fit union driver against twisting in the drill spindle.

A friction-locking union holds and centres the drill chuck with the morse taper in the drill spindle.

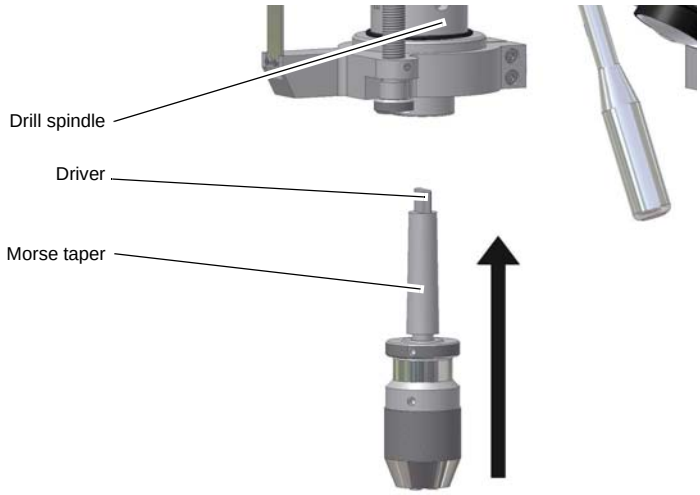

Img. 4-12: Morse taper

➜ Check and, if necessary, clean the conical seat in the drill spindle and at the morse taper of the tool or the drill chuck.

➜ Press the morse taper into the drill spindle.

4.9 Liquid cooling system

The friction generated during rotation can cause the edge of the tool to become very hot.

The tool should be cooled during the drilling process. Cooling the tool with a suitable cooling lubricant ensures better working results and a longer edge life of the tools.

This is best realised by a separate cooling equipment. If there is no cooling equipment included in the delivery volume, you can cool by means of a spray gun or a washing bottle.

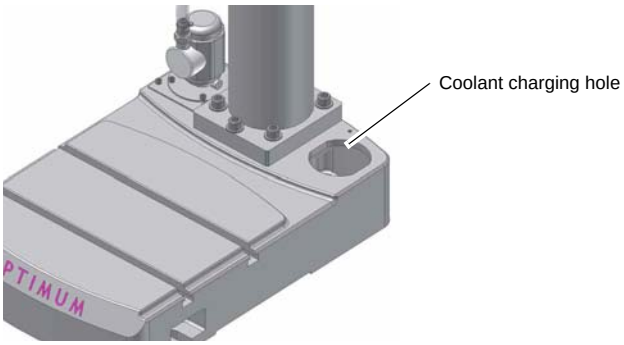

Illustr. 4-13: Charging hole

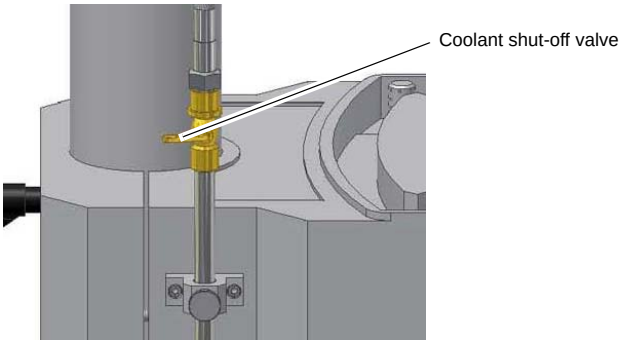

Illustr. 4-14: Coolant shut-off valve

© 2014 US

➜ Adjust the flow using the shut-off valve.

ATTENTION!

Failure of the pump in the event of a dry run.

The pump is lubricated by the cooling agent. Do not start up the pump without cooling agent.

☞ **„Padding/ Rinse/ Replace“ on page 43**

INFORMATION

Use a water-soluble and non-pollutant oil as a cooling agent. This can be acquired from authorized distributors.

Re-use cooling agents and lubricants.

Respect the environment when disposing of any lubricants and cooling agents.

Follow the manufacturer’s disposal instructions.

4.10 Before starting work

Before starting work, select the desired speed. This will depend on the diameter of the bit being used and the material.

☞ „Determining the cutting speed and the speed“ on page 34

WARNING!

For drilling jobs, it is necessary to clamp the workpiece firmly to prevent the bit catching on the piece. A machine vice or clamping jaws is a suitable clamping device.

Put a wooden or plastic board beneath the workpiece to avoid drilling through to the work table, vice, etc.

If necessary, adjust the desired drilling depth with the drill depth stop to obtain a constant result.

When working with wood, make sure to use an adequate dust extraction unit, as sawdust can constitute a health hazard. Also use a suitable protective mask for any work that generates dust.

4.11 During work

The spindle is advanced by means of the star wheel. Make sure that the feed is constant and not too fast.

The spindle is returned to its initial position by the return spring.

WARNING!

Danger of clothing and/or long hair getting caught.

- **Make sure to wear well-fitting work during drilling work.**
- **Do not use gloves.**
- **If necessary, use a hairnet.**

CAUTION!

Danger of bumps from the levers on the star wheel.

Do not release the star wheel when repositioning the drill spindle.

© 2014

CAUTION!

Danger of crushing! Do not place your hand between the drill head and the spindle.

The smaller the bit, the more likely it is to break.

In the case of deep drilling, remove the bit from time to time to remove drilling chips from the bore hole. A few drops of oil will reduce friction and prolong the service life of the bit.

© 2014 US

5 Determining the cutting speed and the speed

5.1 Table cutting speeds / infeed

Material table						
Material to be processed	Recommended cutting speed **Vc** in m/min	Recommended infeed **f** in mm/revolution				
		Drill bit diameter **d** in mm				
		2...3	>3...6	>6...12	>12...25	>25...50
Unalloyed construction steels < 700 N/mm²	30 - 35	0.05	0.10	0.15	0.25	0.35
Alloyed construction steels > 700 N/mm²	20 - 25	0.04	0.08	0.10	0.15	0.20
Alloyed steels < 1000 N/mm²	20 - 25	0.04	0.08	0.10	0.15	0.20
Steels, low stability < 800 N/mm²	40	0.05	0.10	0.15	0.25	0.35
Steel, high stability > 800 N/mm²	20	0.04	0.08	0.10	0.15	0.20
non-rust steels > 800 N/mm²	12	0.03	0.06	0.08	0.12	0.18
Cast iron < 250 N/mm²	15 - 25	0.10	0.20	0.30	0.40	0.60
Cast iron > 250 N/mm²	10 - 20	0.05	0.15	0.25	0.35	0.55
CuZn alloy brittle	60 - 100	0.10	0.15	0.30	0.40	0.60
CuZn alloy ductile	35 - 60	0.05	0.10	0.25	0.35	0.55
Aluminum alloy up to 11% Si	30 - 50	0.10	0.20	0.30	0.40	0.60
Thermoplastics	20 - 40	0.05	0.10	0.20	0.30	0.40
Thermosetting materials with organic filling	15 - 35	0.05	0.10	0.20	0.30	0.40
Thermosetting materials with anorganic filling	15 - 25	0.05	0.10	0.20	0.30	0.40

5.2 Speed table

Vc in m/min	4	6	8	10	12	15	18	20	25	30	35	40	50	60	80	100
Drill bit **Ø** in mm	Speed **n** in rpm															
1.0	1274	1911	2548	3185	3822	4777	5732	6369	7962	9554	11146	12739	15924	19108	25478	31847
1.5	849	1274	1699	2123	2548	3185	3822	4246	5308	6369	7431	8493	10616	12739	16985	21231
2.0	637	955	1274	1592	1911	2389	2866	3185	3981	4777	5573	6369	7962	9554	12739	15924
2.5	510	764	1019	1274	1529	1911	2293	2548	3185	3822	4459	5096	6369	7643	10191	12739
3.0	425	637	849	1062	1274	1592	1911	2123	2654	3185	3715	4246	5308	6369	8493	10616
3.5	364	546	728	910	1092	1365	1638	1820	2275	2730	3185	3640	4550	5460	7279	9099
4.0	318	478	637	796	955	1194	1433	1592	1990	2389	2787	3185	3981	4777	6369	7962

© 2014

Vc in m/min	4	6	8	10	12	15	18	20	25	30	35	40	50	60	80	100
Drill bit **Ø** in mm	Speed **n** in rpm															
4.5	283	425	566	708	849	1062	1274	1415	1769	2123	2477	2831	3539	4246	5662	7077
5.0	255	382	510	637	764	955	1146	1274	1592	1911	2229	2548	3185	3822	5096	6369
5.5	232	347	463	579	695	869	1042	1158	1448	1737	2027	2316	2895	3474	4632	5790
6.0	212	318	425	531	637	796	955	1062	1327	1592	1858	2123	2654	3185	4246	5308
6.5	196	294	392	490	588	735	882	980	1225	1470	1715	1960	2450	2940	3920	4900
7.0	182	273	364	455	546	682	819	910	1137	1365	1592	1820	2275	2730	3640	4550
7.5	170	255	340	425	510	637	764	849	1062	1274	1486	1699	2123	2548	3397	4246
8.0	159	239	318	398	478	597	717	796	995	1194	1393	1592	1990	2389	3185	3981
8.5	150	225	300	375	450	562	674	749	937	1124	1311	1499	1873	2248	2997	3747
9.0	142	212	283	354	425	531	637	708	885	1062	1238	1415	1769	2123	2831	3539
9.5	134	201	268	335	402	503	603	670	838	1006	1173	1341	1676	2011	2682	3352
10.0	127	191	255	318	382	478	573	637	796	955	1115	1274	1592	1911	2548	3185
11.0	116	174	232	290	347	434	521	579	724	869	1013	1158	1448	1737	2316	2895
12.0	106	159	212	265	318	398	478	531	663	796	929	1062	1327	1592	2123	2654
13.0	98	147	196	245	294	367	441	490	612	735	857	980	1225	1470	1960	2450
14.0	91	136	182	227	273	341	409	455	569	682	796	910	1137	1365	1820	2275
15.0	85	127	170	212	255	318	382	425	531	637	743	849	1062	1274	1699	2123
16.0	80	119	159	199	239	299	358	398	498	597	697	796	995	1194	1592	1990
17.0	75	112	150	187	225	281	337	375	468	562	656	749	937	1124	1499	1873
18.0	71	106	142	177	212	265	318	354	442	531	619	708	885	1062	1415	1769
19.0	67	101	134	168	201	251	302	335	419	503	587	670	838	1006	1341	1676
20.0	64	96	127	159	191	239	287	318	398	478	557	637	796	955	1274	1592
21.0	61	91	121	152	182	227	273	303	379	455	531	607	758	910	1213	1517
22.0	58	87	116	145	174	217	261	290	362	434	507	579	724	869	1158	1448
23.0	55	83	111	138	166	208	249	277	346	415	485	554	692	831	1108	1385
24.0	53	80	106	133	159	199	239	265	332	398	464	531	663	796	1062	1327
25.0	51	76	102	127	153	191	229	255	318	382	446	510	637	764	1019	1274
26.0	49	73	98	122	147	184	220	245	306	367	429	490	612	735	980	1225
27.0	47	71	94	118	142	177	212	236	295	354	413	472	590	708	944	1180
28.0	45	68	91	114	136	171	205	227	284	341	398	455	569	682	910	1137
29.0	44	66	88	110	132	165	198	220	275	329	384	439	549	659	879	1098
30.0	42	64	85	106	127	159	191	212	265	318	372	425	531	637	849	1062
31.0	41	62	82	103	123	154	185	205	257	308	360	411	514	616	822	1027
32.0	40	60	80	100	119	149	179	199	249	299	348	398	498	597	796	995
33.0	39	58	77	97	116	145	174	193	241	290	338	386	483	579	772	965
34.0	37	56	75	94	112	141	169	187	234	281	328	375	468	562	749	937
35.0	36	55	73	91	109	136	164	182	227	273	318	364	455	546	728	910
36.0	35	53	71	88	106	133	159	177	221	265	310	354	442	531	708	885
37.0	34	52	69	86	103	129	155	172	215	258	301	344	430	516	689	861
38.0	34	50	67	84	101	126	151	168	210	251	293	335	419	503	670	838

© 2014

Vc in m/min	4	6	8	10	12	15	18	20	25	30	35	40	50	60	80	100
Drill bit **Ø** in mm	Speed **n** in rpm															
39.0	33	49	65	82	98	122	147	163	204	245	286	327	408	490	653	817
40.0	32	48	64	80	96	119	143	159	199	239	279	318	398	478	637	796
41.0	31	47	62	78	93	117	140	155	194	233	272	311	388	466	621	777
42.0	30	45	61	76	91	114	136	152	190	227	265	303	379	455	607	758
43.0	30	44	59	74	89	111	133	148	185	222	259	296	370	444	593	741
44.0	29	43	58	72	87	109	130	145	181	217	253	290	362	434	579	724
45.0	28	42	57	71	85	106	127	142	177	212	248	283	354	425	566	708
46.0	28	42	55	69	83	104	125	138	173	208	242	277	346	415	554	692
47.0	27	41	54	68	81	102	122	136	169	203	237	271	339	407	542	678
48.0	27	40	53	66	80	100	119	133	166	199	232	265	332	398	531	663
49.0	26	39	52	65	78	97	117	130	162	195	227	260	325	390	520	650
50.0	25	38	51	64	76	96	115	127	159	191	223	255	318	382	510	637

5.3 Examples to calculatory determine the required speed for your drilling machine

The necessary speed is depending on the diameter of the drill bit, on the material which is being machined as well as on the cutting material of the drill bit.

Material which needs to be drilled: St37

Cutting material (drill bit): HSS spiral bit

Set point of the cutting speed [V_c] according to the table: 40 meters per minute

Diameter [d] of your drill bit: 30 mm = 0.03 m [meters]

Selected infeed [f] according to the table: about 0.35 mm/rev

Speed $n = \frac{\vartheta c}{\pi \times d} = \frac{40m}{min \times 3,14 \times 0,03m} = 425(rpm)$

Set a speed on your drilling machine which is less than the determined speed.

INFORMATION

In order to facilitate the production of larger drill holes they need to be pre-drilled. Thi ı reduce the cutting forces and improve the guiding of the drill bit.

The pre-drilling diameter is depending on the length of the chisel edge. The chisel edge does not cut, but it squeezes the material. The chisel edge is positioned at an angle of 55° to the major cutting edge.

As a general rule of thumb it applies: The pre-drilling diameter is depending on the length of the chisel edge.

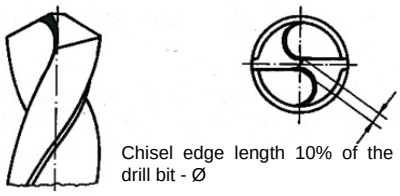

Chisel edge length 10% of the drill bit - Ø

Recommended working steps for a drilling diameter of 30 mm

Example:

1st working step: Pre-drilling with Ø 5 mm (0.2").

2nd working step: Pre-drilling with Ø 15 mm (0.6").

3rd working step: Drilling with Ø 30 mm (1.2").

© 2014

6 Maintenance

In this chapter you will find important information about

- inspection,
- maintenance,
- repair.

The diagram below shows which tasks fall under these categories.

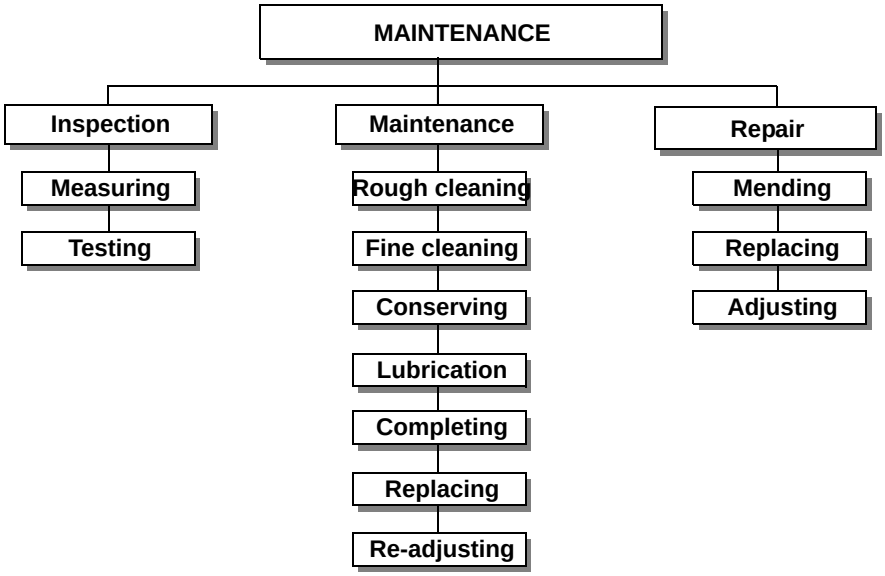

Img. 6-1: Maintenance – Definition according to DIN 31051

ATTENTION!

Properly performed regular maintenance is an essential prerequisite for

- **safe operation,**
- **faulty-free operation,**
- **long service life of the lathe**
- **the quality of the products to manufacture.**

Installations and equipment from other manufacturers must also be in optimum condition.

ENVIRONMENTAL PROTECTION

During work on the spindle head and on the apron, please make sure that

- **collector vessels are used with sufficient capacity for the amount of liquid to be collected.**
- **liquid and oils should not be spilt on the ground.**

Clean-up any spilt liquids or oils immediately, using proper oil-absorption methods and dispose of them in accordance with current legal requirements on the environment.

Cleaning-up spills

Do not re-introduce liquids spilt outside the system during repair or as result of leakage from the reserve tank: collect them in a collecting container to be disposed of.

Disposal

Never dump oil or other pollutant substances in water inlets, rivers or channels.

© 2014 US

Used oils must be delivered to a collection center. Consult your supervisor if you do not know where the collection center is.

6.1 Safety

WARNING!

The consequences of incorrect maintenance and repair work may include:
- **very serious injury to personnel working on the machine,**
- **damage to the machine.**

Only qualified staff should carry out maintenance and repair work on the machine.

6.1.1 Preparation

WARNING!

Only carry out work on the drill if it has been disconnected from the main power supply.

Position a warning sign.

6.1.2 Restarting

Perform a safety check before recommissioning.

☞ „Safety check“ on page 10

WARNING!

Before activating the drill, double check that this will not
- **endanger other people,**
- **damage the drill itself.**

6.2 Inspection and maintenance

The type and extent of wear depends to a large extent on individual usage and service conditions. Any indicated intervals therefore are only valid for the corresponding approved conditions.

Intervall	Where?	What?	How?
Start of shift after each maintenance or repair operation	Drilling machine	☞ „Safety check“ on page 10	

© 2014

Intervall	Where?	What?	How?
every month	Rack and column	Lubricate	• Lubricate the drilling upright regularly with commercial oil, machine oil, engine oil. • Lubricate the rack regularly with commercial grease (e.g. friction bearing grease). 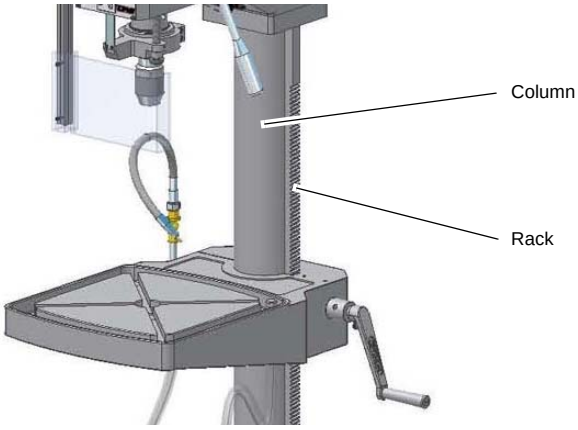 Img.6-2: B30 BS Vario
every six months	V-belts at the drill head	Visual inspection	• Check whether the V-belts have become porous and worn. 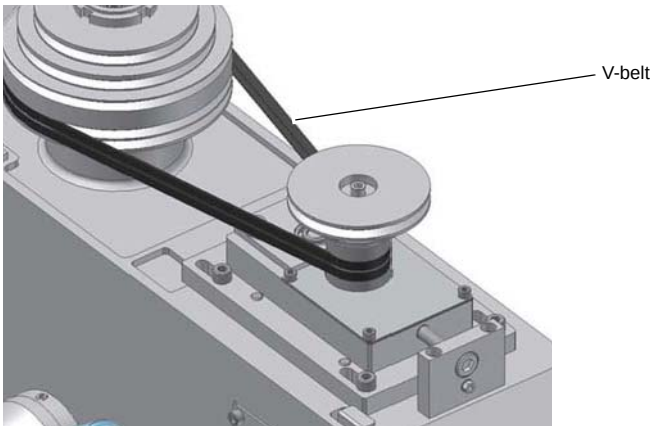 Img.6-3: V-belt housing
every month	Oiler	Lubri-cate	➜ Lubricate all oilers with machine oil, do not use a grease gun or similar greasing equipment. Use the oil bottle included with the machine. 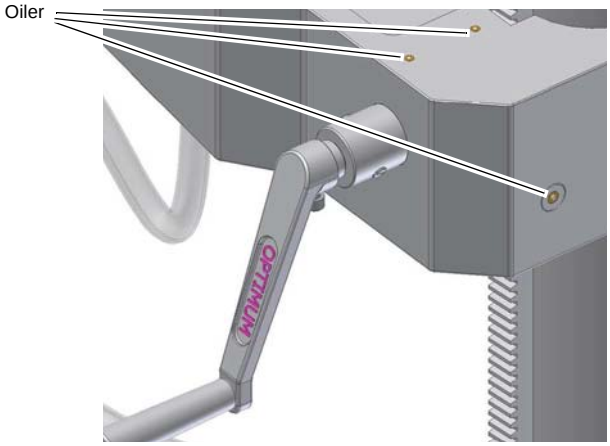 Img.6-4: Oiler

© 2014 US

Intervall	Where?	What?	How?
every six months	Electrical system	Testing	Check the electrical equipment / components of the drilling machine. ☞ „Qualification of employees“ on page 8
every six months	Gear reduction	Relubricate	• Completely unscrew the hexagon socket screw and fill in about 20g lubricating grease into the opening. The lubrication is provided for the gears. The grooved ball bearing of the gear reduction is prelubricated. 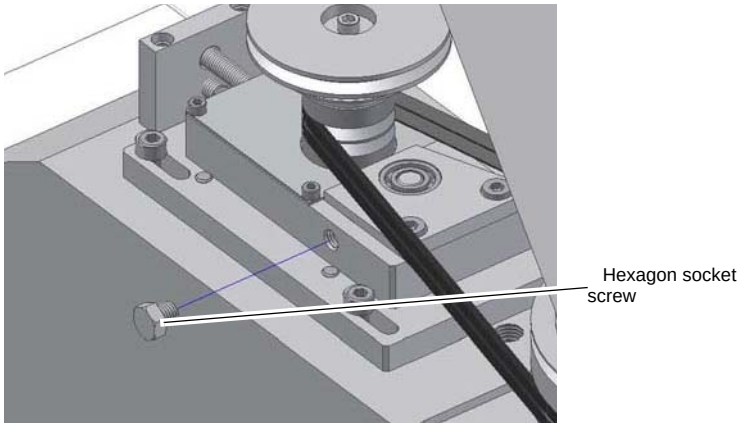 Img. 6-5: Gear reduction
As required	Coolant equipment	Padding/ Rinse/ Replace	➜ The cooling pump is almost entirely maintenance-free. Replace the cooling agent regularly, depending on usage. ➜ When using coolants which leave residues, the coolant pump must be removed and rinsed possibly. ➜ Suck the old cooling agent off with a suitable industrial suction cup over the charging hole. ➜ Fill in new coolant over the chip tray. The maximum capacity of the coolant is about 4.75 quarts. 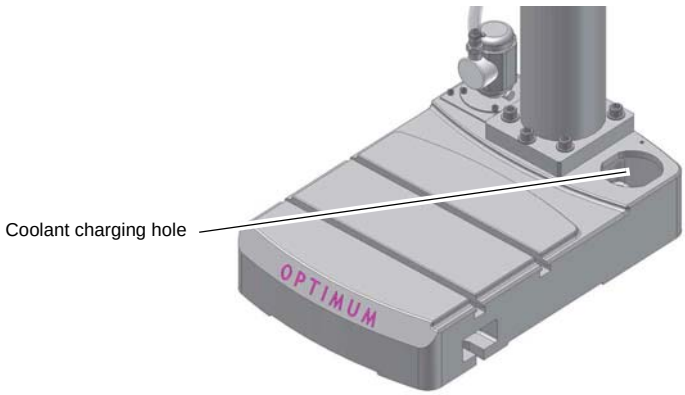 Img. 6-6: Coolant tank B30 BS Vario

© 2014

Intervall	Where?	What?	How?
as required	Restoring spring	Readjust	**CAUTION!** **Parts may fly off at high speed. When disassembling the key housing, please make sure that the machine is only maintained and prepared by qualified staff.** 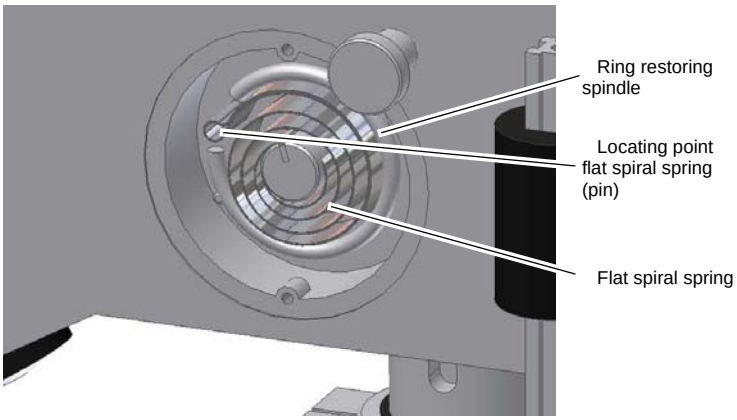 Img.6-7: Restoring spring 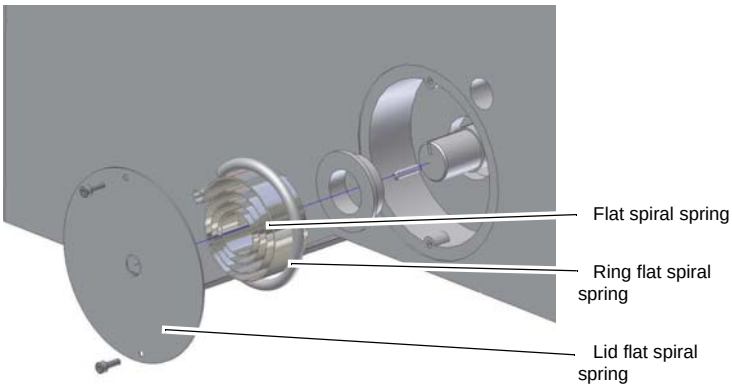 Img.6-8: Exploded view spring housing

INFORMATION!

The spindle bearing arrangement is permanently lubricated. No new lubrication is necessary.

6.3 Repair

Repairs must be carried out only by qualified technical staff; and must follow the instructions and guidelines given in this manual. Should technical assistance be required, contact LDS Industries at 1-630-785-6437.

Optimum Maschinen - Germany and LDS Industries are not liable for, nor do they guarantee against, damage or operating malfunctions resulting from alteration, abuse, lack of maintenance or this product's use for other than its intended purpose. Failure to read and follow this operating manual is not covered.

For repairs only use

- Proper and suitable tools,
- Parts purchased from Optimum, or its authorized agent.

© 2014 US

7 Spare parts B30BS

7.1 Drilling head 1 of 4

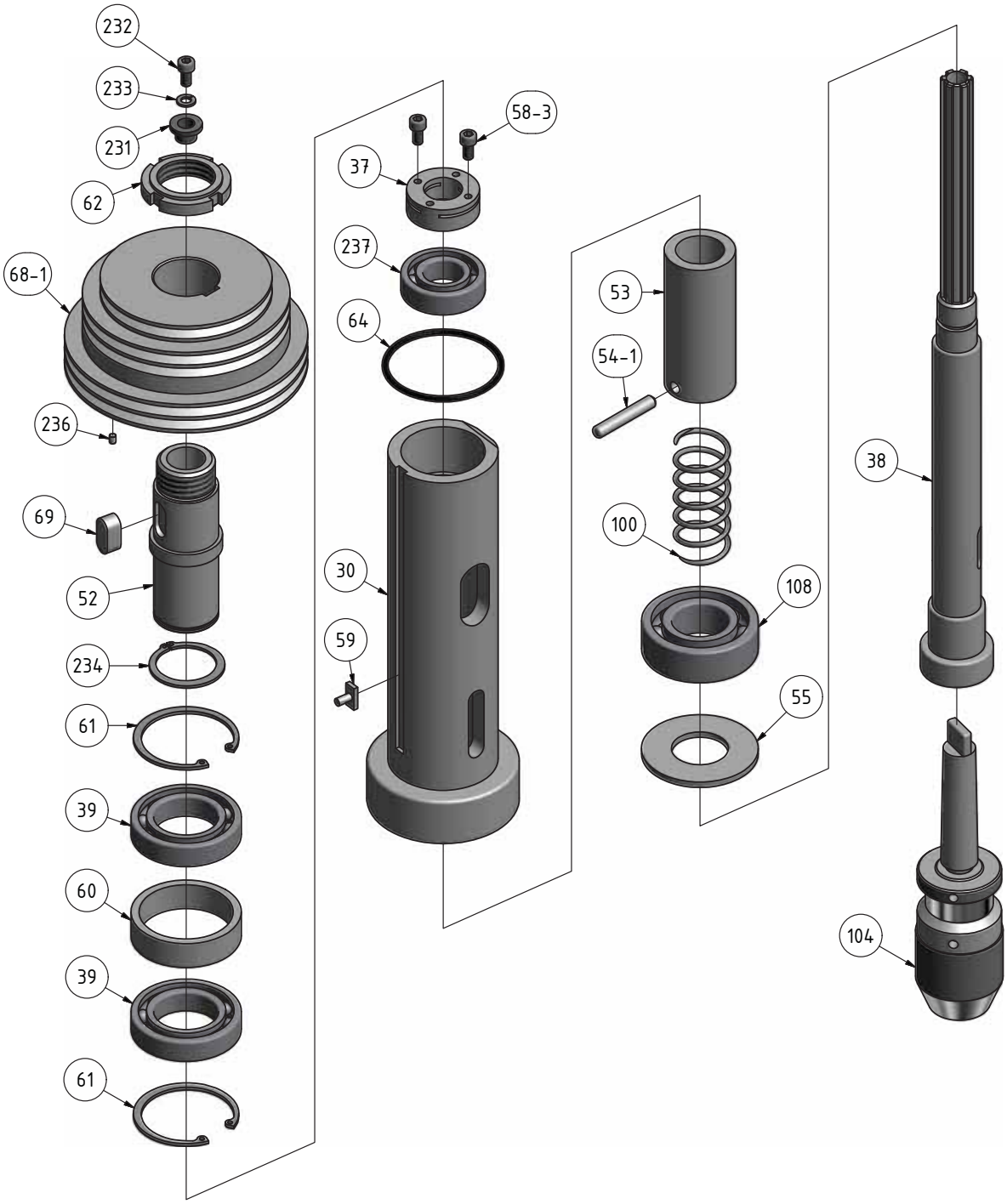

Abb. 7-1: Drilling head 1 of 4

7.2 Drilling head 2 of 4

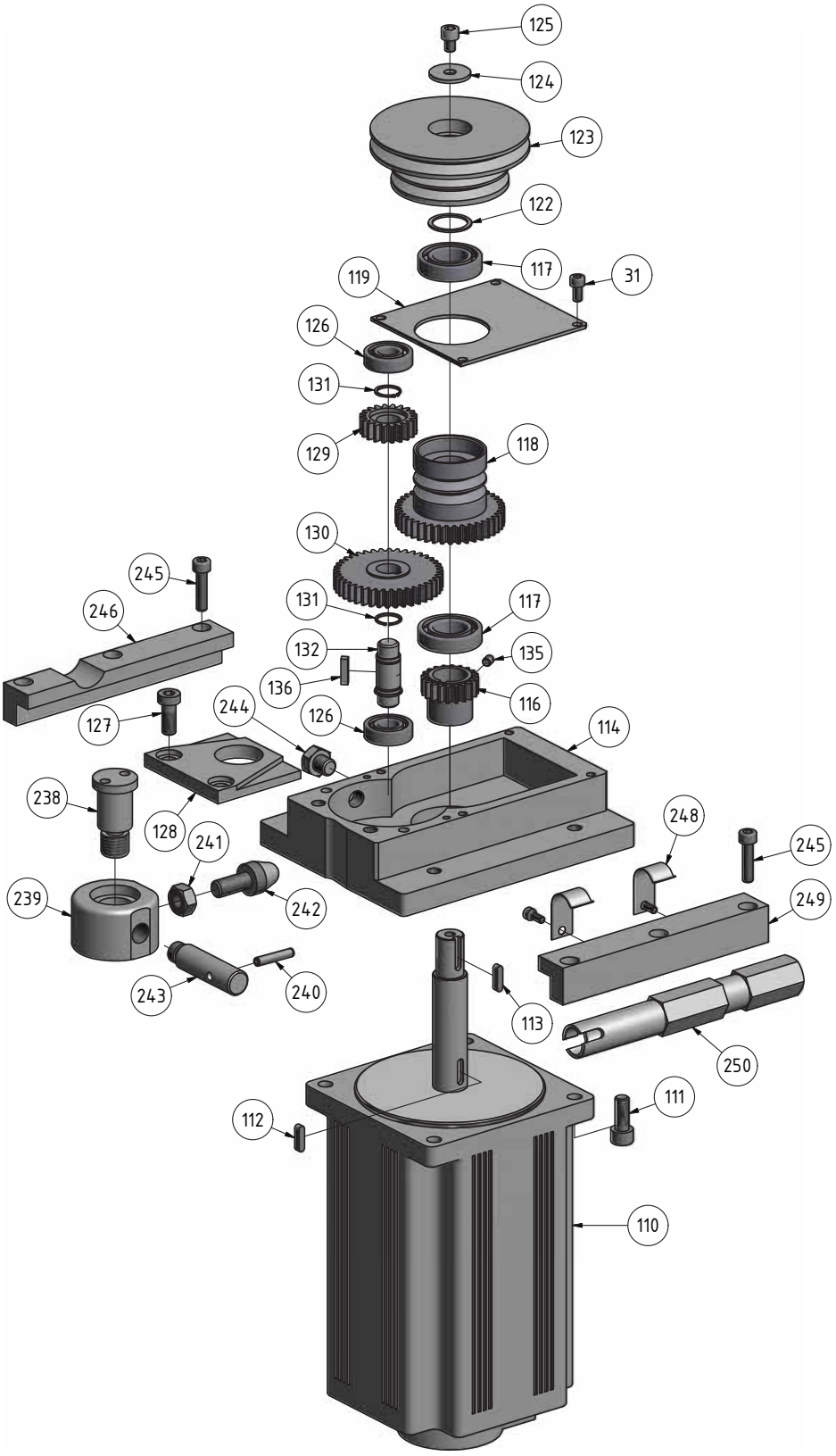

Abb. 7-2: Drilling head 2 of 4

7.3 Drilling head 3 of 4

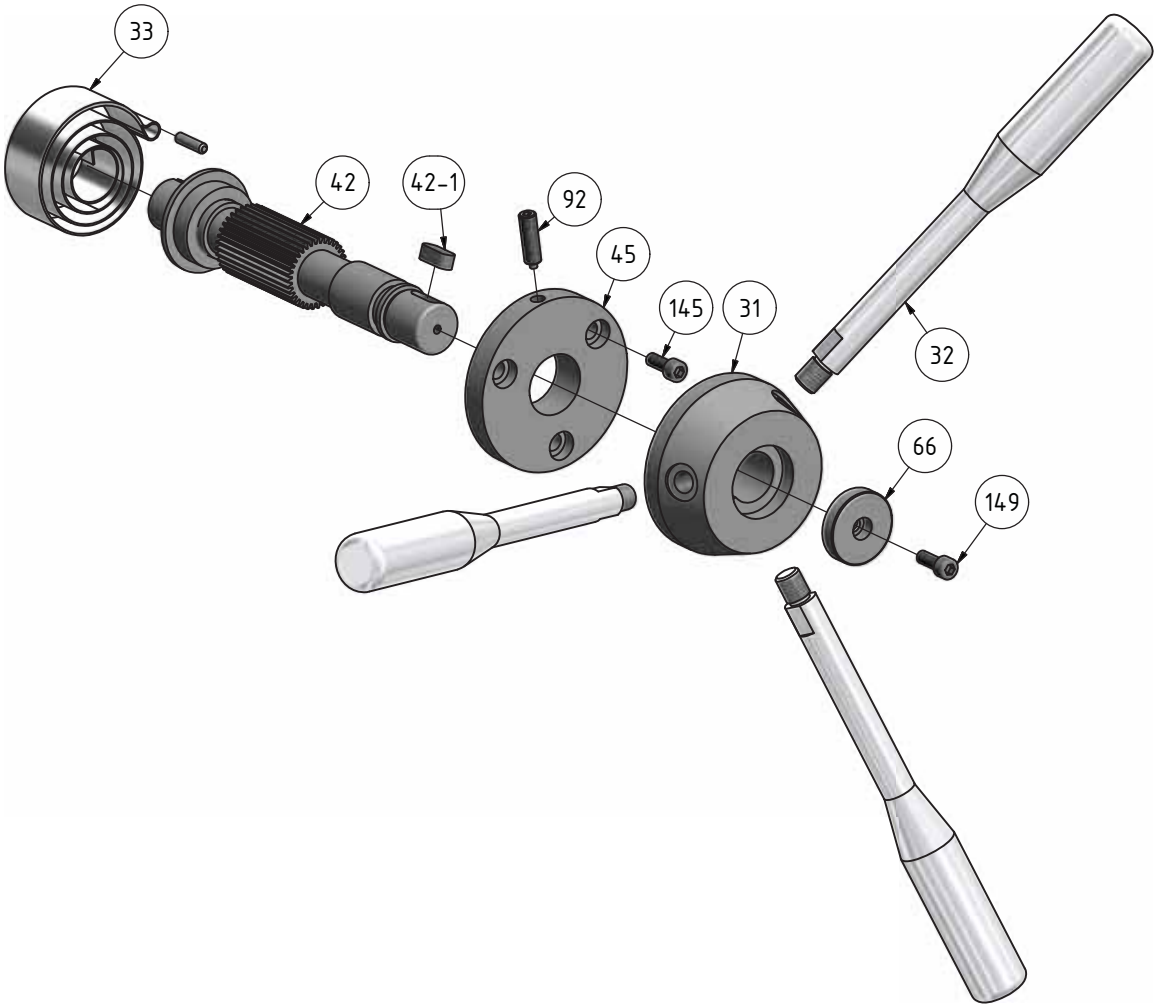

Abb. 7-3: Drilling head 3 of 4

7.4 Drilling head 4 of 4

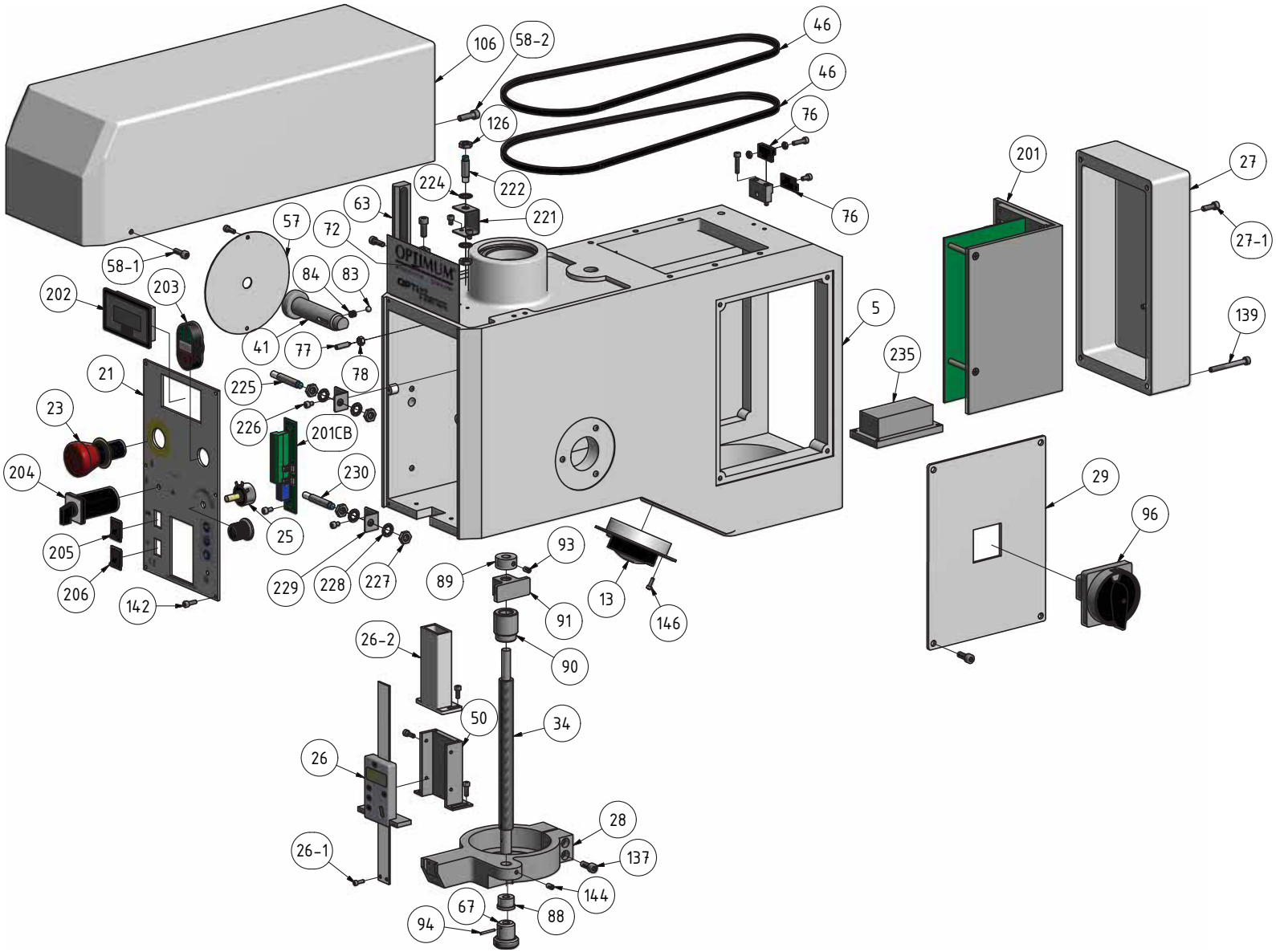

Abb. 7-4: Drilling head 4 of 4

7.5 Drilling chuck protection

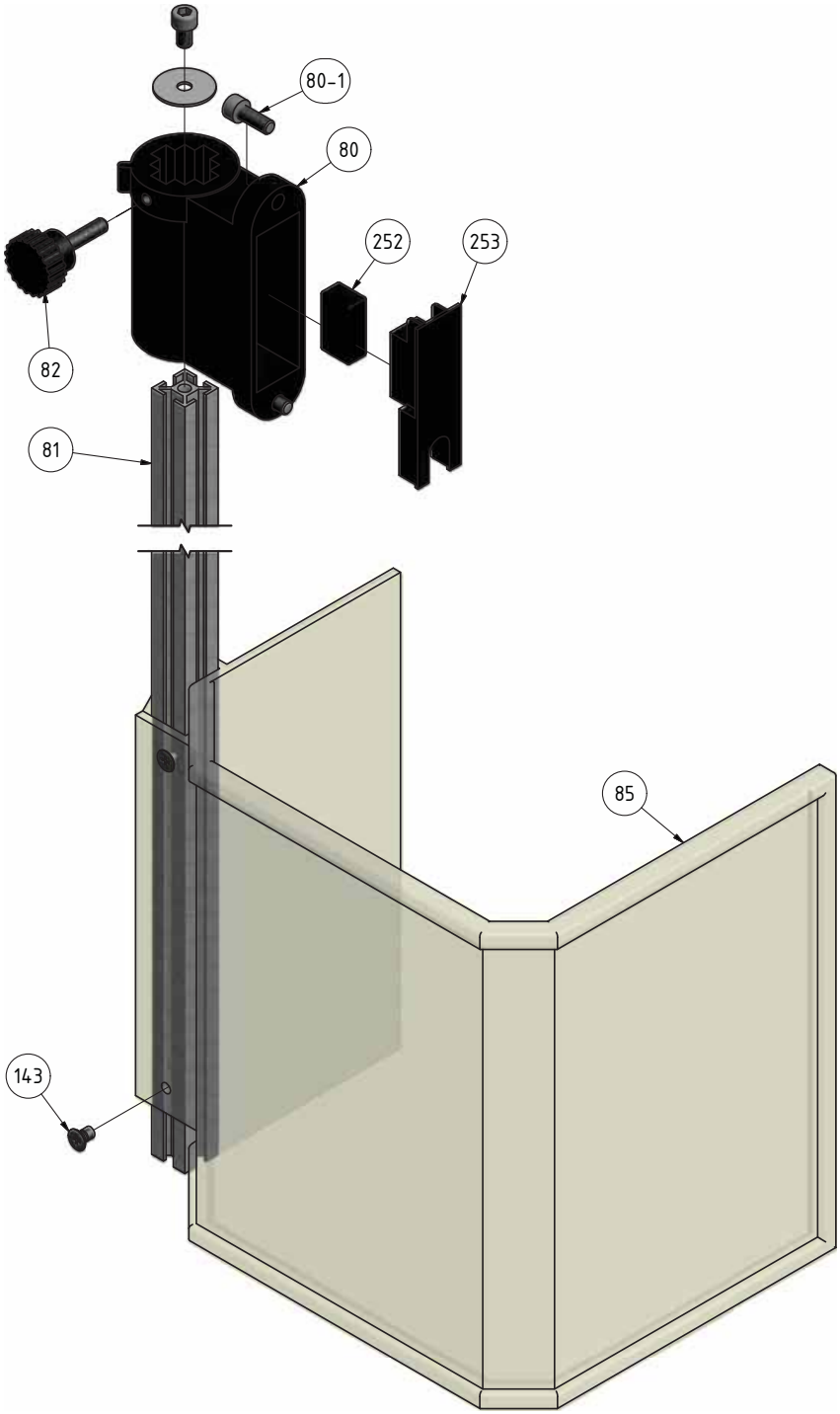

Abb. 7-5: Drilling chuck protection

7.6 Säule - Column

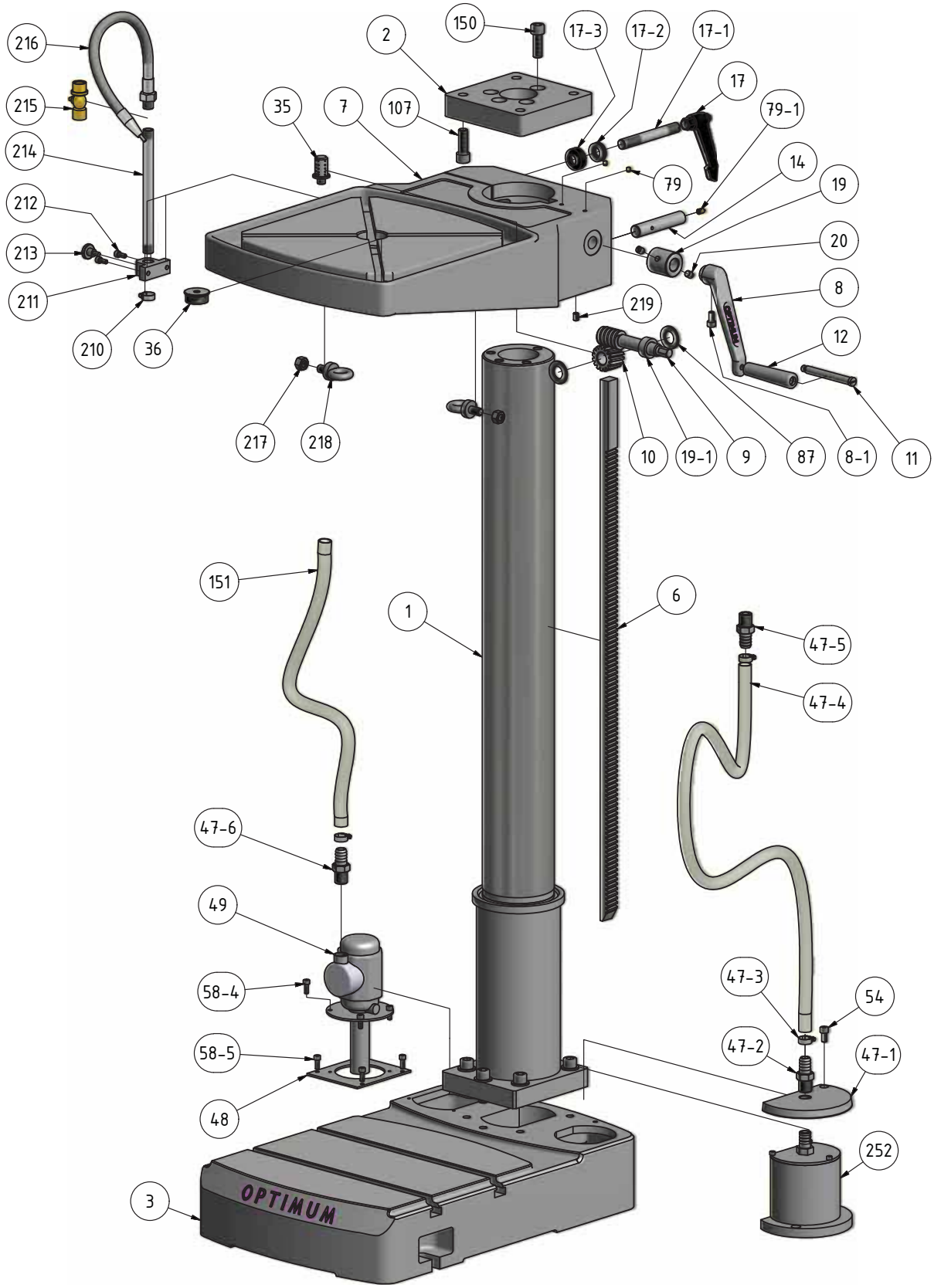

Abb. 7-6: Column

7.6.1 Spare parts list

Pos.	Description	Qty.	Size	Item no.
1	Column	1	B30-01-10	030213031
2	Distance plate	1	B30-01-04	030213032
3	Base	1	B30-01-01	030213033
4	Washer	5	DIN 125-A -14	030213034
5	Drilling head	1		030213035
6	Toothed rack	1	B30-01-05	030213036
7	Drilling table	1	B30-01-03	030213037
8	Crank	1	B30-01-09	030213038
8-1	Hexagon socket screw	1	M8x16	0302130381
9	Worm	1	B30-01-06	030213039
10	Worm wheel	1	B30-01-08	0302130310
11	Screw	1	GB4141.5-86	0302130311
12	Handle	1		0302130312
13	Lamp	1		0302130313
14	Shaft	1	B30-01-12	0302130314
17	Clamping lever	1	HY8310.12-2	0302130317
17-1	Locking screw	1	M16	03021303171
17-2	Axial bearing	1	51103	04051103
17-3	Protection bush	1		03021303173
19	Spacer	1	B30-01-07	0302130319
19-1	Spacer	1	B30-01-11	03021303191
20	Locking screw	3	M10x10	0302130320
21	Switch plate	1	USA	0302130321-inch
23	Emergency stop switch	1		0302130323
25	Potentiometer	1		0302130325
26	Digital display	1		0302130326
26-1	Hexagon socket screw	2	M3x12	03021303261
26-2	Prodective cover	1		03021303262
26-3	Hexagon socket screw	2		03021303263
27	Rear cover plate	1	B30BS-03-21	0302130327
27-1	Hexagon socket screw	2	M5x16	03021303271
28	Support	1	B30BS-03-02	0302130328
29	Lateral cover plate	1	B30BS-03-42	0302130329
30	Sleeve	1		0302130330
31	Fixture sleeve handle	1		0302130331
32	Spindle handle	3		0302130332
33	Spiral spring	1		0302130333

Pos.	Description	Qty.	Size	Item no.
34	Tthreaded rod	1	B30BS-03-41	0302130334
35	Coolant filter	1		0302130335
36	Plug	1	B30-01-14	0302130336
37	Clamping nut spindle bearings	1		0302130337
38	Spindle	1		0302130338
39	Bearing	2	6008-2Z	0406008.2Z
41	Device for ejection	1		0302130341
42	Toothed shaft	1		0302130342
42-1	Key	1	8x20	03021303421
43	Disk belt tension	1		0302130343
43-1	Hexagon socket screw	2		03021303431
45	Lid toothed shaft	1		0302130345
46	Polyflex V-belt	2	JB/ 7M-JB 825	0302130346
47-1	Plate coolant reservoir	1		03021303471
47-2	Hose clip	1		03021303472
47-3	Hose clamp	3		03021303473
47-4	Coolant hose	1		03021303474
47-5	Hose clip	1		03021303475
47-6	Hose clip	1		0302130346
48	Plate pump	1		0302130348
49	Coolant pump	1		0302130349
50	Holder	1		0302130350
50-1	Hexagon socket screw	2	M5x12	03021303501
52	Shaft v-belt pulley	1		0302130352
53	Bushing spindle	1		0302130353
54	Hexagon socket screw	7		0302130354
54-1	Cylinder bolt	1	GB/T879-1986-8x45	03021303541
55	Washer	1		0302130355
56	Cylinder bolt	1	5x35	0302130356
57	Cover sheet spring housing	1		0302130357
58	Hexagon socket screw	4	M6x25	0302130358
58-1	Hexagon socket screw	2	M5x32	03021303581
58-2	Hexagon socket screw	1	M5x25	03021303582
58-3	Hexagon socket screw	2	M4x10	03021303583
58-4	Hexagon socket screw	4		03021303584
58-5	Hexagon socket screw	4		03021303585
58-6	Hexagon socket screw	2	M3x20	03021303586
59	Sliding block	1		0302130359

Pos.	Description	Qty.	Size	Item no.
59-1	Hexagon socket screw	5	M14x55	03021303591
60	Spacing sleeve	1		0302130360
61	Retaining ring	2	GB/T893.1-86-62	0302130361
62	Groove nut	1	M36	0302130362
63	Guidance_covering	1		0302130363
64	Gasket	1		0302130364
66	Washer	1		0302130366
67	Adjusting screw	1		0302130367
68-1	V-belt pulley magnet holder (3-steps)	1		03021303681
69	Key	1		0302130369
72	Clamping bushing	2		0302130372
73	Hexagon socket screw	1	M10x50	0302130373
74	Set screw	1	B30BS-03-20	0302130374
75	Holder reed contact	1		0302130375
75-1	Hexagon socket screw	2	M3x25	03021303751
76	Reed contact	1		0302130376
77	Set screw	1	M6x20	0302130377
78	Hexagonal nut	1	M6	0302130378
79	Pressure Oil Cup	2		0302130379
79-1	Pressure Oil Cup	1		03021303791
80	Fixture	1		0302130380
80-1	Hexagon socket screw	2		03021303801
81	Aluminum profile	1	20x20	0302130381
82	Knurled screw	1	M6	0302130382
83	Ball	1	D=6	0302130383
84	Compression spring	1	1x5x10	0302130384
85	Drill chuck protection	1		0302130385
86	Bushing toothed shaft	1		0302130386
87	Washer	2	GB/T 97.1-1985	0302130387
88	Bushing drill limit stop	1		0302130388
89	Bushing threaded rod	1		0302130389
90	Guide bush	1		0302130390
91	Drill limit stop	1		0302130391
92	Set screw	1	M8x10	0302130392
93	Set screw	2	M6x8	0302130393
94	Cylinder bolt	1	3x18	0302130394
96	Main switch	1		0302130396

Pos.	Description	Qty.	Size	Item no.
98	Coolant hose	13		0302130398
100	Compression spring	1	35.287	03021303100
103	Ring spiral spring	1		03021303103
104	Drill chuck	1		03021303104
104-1	Drill chuck (year of construction since 09/2009)	1		3050626
106	Covering belt housing	1		03021303106
107	Hexagon socket screw	4	M14x50	03021303107
108	Taper roller bearing	1	30207	04030207
110	Motor	1		03021303110
111	Hexagon socket screw	4	M8x25	03021303111
112	Key	1	4x4x15	03021303112
113	Key	1	4x4x20	03021303113
114	Engine board	1		03021303114
115	Hexagon socket screw	4	M8x30	03021303115
116	Toothed wheel	1	Z=20; m=1,5	03021303116
117	Bearing	2	61904	03021303117
118	Pulley reduction gear	1	Z=40; m=1,5	03021303118
119	Cover plate			03021303119
120	Hexagon socket screw	4	M5x10	03021303120
122	Washer	1		03021303122
123	V-belt pulley motor (3-steps)	1		03021303123
123-1	V-belt pulley motor (4-steps)	1		030213031231
123-2	V-belt pulley spindle (4-steps)	1		030213031232
124	Washer	1		03021303124
125	Hexagon socket screw	1	M6x12	03021303125
126	Bearing	2	6001	0406001
127	Hexagon socket screw	2	M8x20	03021303127
128	Bearing support	1		03021303128
129	Toothed wheel	1	Z=20; m=1,5	03021303129
130	Toothed wheel	1	Z=40; m=1,5	03021303130
131	Retaining ring	2	DIN 471 14x1	03021303131
132	Intermediate shaft	1		03021303132
134	Hexagon head screw	1	M10x10	03021303134
135	Set screw	1	M5x6	03021303135
136	Key	1	4x16	03021303136
137	Hexagon socket screw	2	M6x50	03021303137
138	Hexagon socket screw	2	M4x12	03021303138

Pos.	Description	Qty.	Size	Item no.
139	Hexagon socket screw	4	M5x55	03021303139
140	Hexagon socket screw	1	M6x10	03021303140
141	Hexagon socket screw	2	M4x6	03021303141
142	Hexagon socket screw	6	M4x10	03021303142
143	Hexagon socket screw	2	M5x20	03021303143
144	Set screw	1	M5x15	03021303144
145	Hexagon socket screw	3	M8x15	03021303145
146	Hexagon socket screw	2		03021303146
148	Hexagon socket screw	4	M6x10	03021303148
149	Hexagon socket screw	1	M5x12	03021303149
150	Hexagon socket screw	4	M14x45	03021303150
151	Coolnat hose	1		03021303151
201	Control board	1		03021303201
201 CB	Terminal block	1		03021303201CB
202	Speed indicator	1		03021303202
203	Switch ON/OFF	1		03021303203
204	Switch rotating direction - threading-automatic	1		03021303204
205	Switch coolant	1		03021303205
206	Switch lamp	1		03021303206
210	Hose clamp	1		03021303210
211	Holder	1		03021303211
212	Hexagon socket screw	2	M6x14	03021303212
213	Clamping screw	1	M6x12	03021303213
214	Coolant hose	1		03021303214
215	Ball valve	1		03021303215
216	Flexible coolant hose	1		03021303216
217	Hexagonal nut	2		03021303217
218	Ring bolt	2		03021303218
219	Set screw	1	M8x10	03021303219
220	Hexagon socket screw	2		03021303220
221	Holder sensor	1		03021303221
222	Sensor speed	1		03021303222
223	Hexagonal nut	2		03021303223
224	Washer	2	GB 861.1-87	03021303224
225	Sensor	1	LJ8A3-2-Z/BY	03021303225
226	Hexagon socket screw	4		03021303226
227	Hexagonal nut	4		03021303227

Pos.	Description	Qty.	Size	Item no.
228	Washer	4		03021303228
229	Holder sensor	2		03021303229
230	Sensor	2	LJ8A3-2-Z/BY	03021303230
231	Washer	1		03021303231
232	Hexagon socket screw	1	M6x12	03021303232
233	Washer	1	DIN128	03021303233
234	Retaining ring	1	DIN471-40x1,75	03021303234
235	Pump relay	1		03021303235
236	Bar magnet	4		03021303236
237	Taper roller bearing	1	30205	04030205
238	Shaft	1		03021303238
239	Eccentric	1		03021303239
240	Spring pin	1	ISO 8752/5x26	
241	Hexagon nut	1	ISO 4032/M10	
242	Correcting bolt	1		03021303242
243	Shaft	1		03021303243
244	Screw	1		03021303244
245	Hexagon socket screw	6	GB 70-85/ M6x25	
246	Guide gib	1		03021303246
247	Hexagon socket screw	2	GB 70-85/ M4x10	
248	Clamping screw	2		03021303248
249	Guide gib	1		03021303249
250	Lever	1		03021303250
251	Motor plate	1		03021303251
252	Safety switch	1		03021303252
253	Holder	1		03021303253

7.7 Wiring diagram 1 of 2

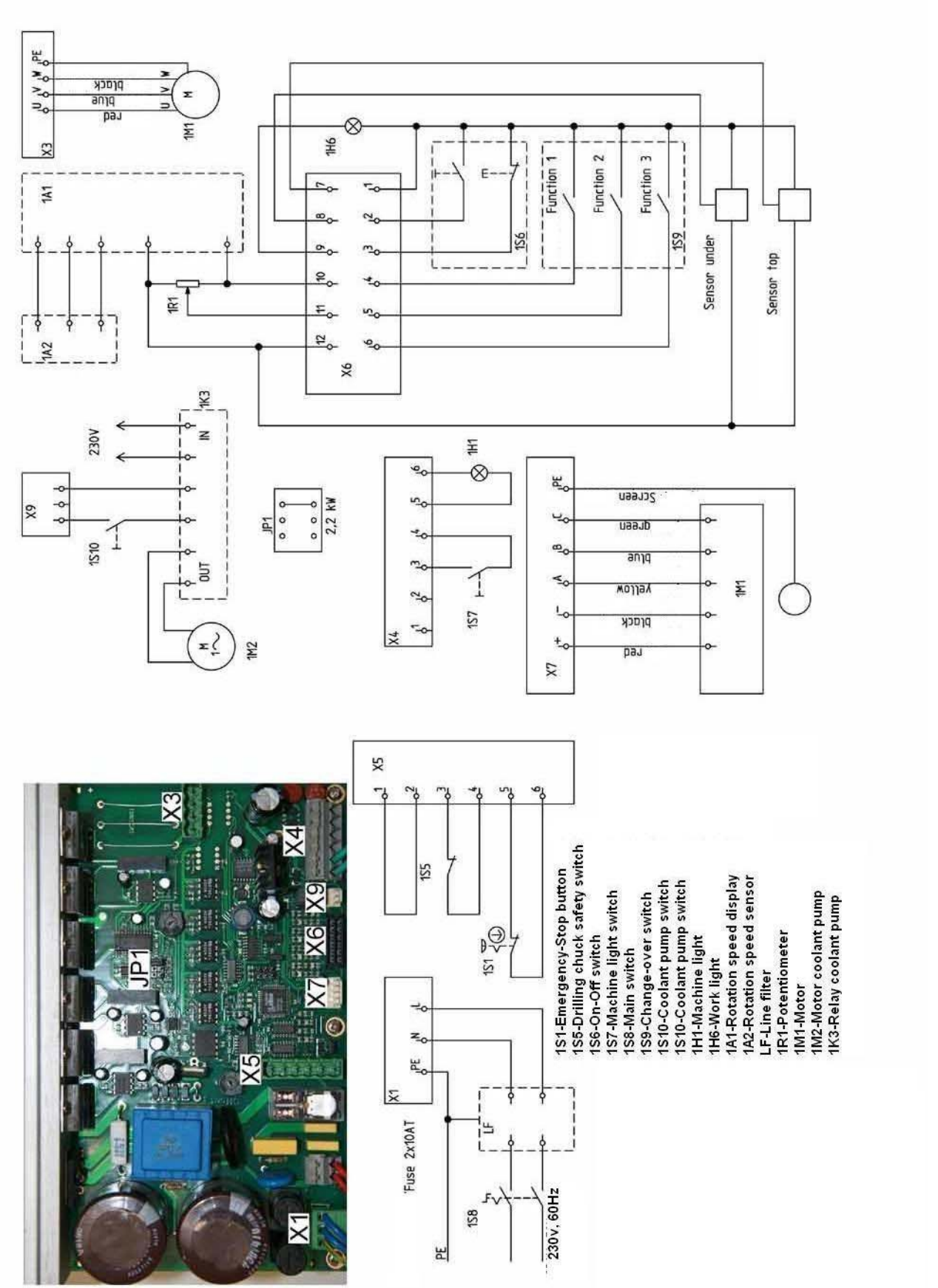

Img. 7-7: Wiring diagram 1 of 2

7.7.1 Wiring diagram 2 of 2

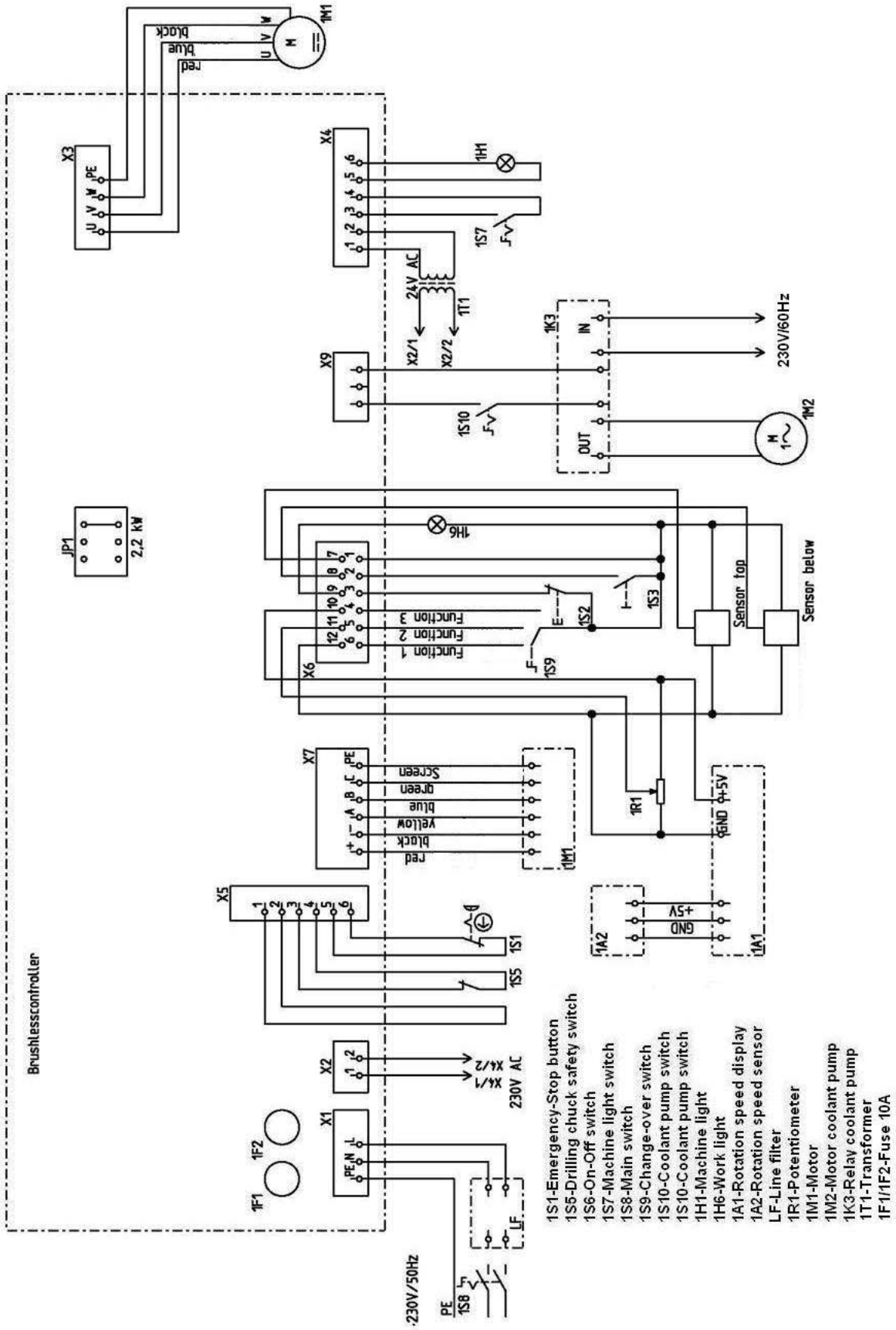

Img. 7-8: Wiring diagram 2 of 2

7.7.2 Ersatzteilliste elektrische Bauteile - Spare parts electrical components

Pos.	Designation	Menge Qty.	Grösse Size	Artikelnummer Item no.
1S1	Emergency-Stop button	1		0302130323
1S5	Drilling chuck safety switch	1		03021303252
1S6	On-Off switch	1		03021303203
1S7	Machine light switch	1		03021303206
1S8	Main switch	1		0302130396
1S9	Change-over switch	1		03021303204
1S10	Coolant pump switch	1		03021303205
1H1	Machine light	1		0302130313
1H6	Work light	1		030213032031
1A1	Rotattion speed display	1		03021303202
1A2	Rotation speed sensor	1		03021303222
LF	Line filter	1		03021303LF
1R1	Potentiometer	1		0302130325
1M1	Motor	1		03021303110
1M2	Motor coolant pump	1		0302130349
1K3	Relay coolant pump	1		03021303235
1T1	Transformer	1		030213031T1
1F1/1F2	Fuse	1	10A	03021303F1

8 Troubleshooting

Problem	Cause/possible effects	Solution
Noise during work	• Spindle turning dry • Tool blunt or incorrectly secured	• Grease spindle • Use new tool and check securing (fixed setting of the bit, bit holder and chuck).
Bit „burnt“	• Incorrect speed/feed too fast • The chips have not been removed from the bore hole • Bit dull • Operating without or too little cooling agent	• Select another rate • Extract bit more often during work • Sharpen or replace bit • Use cooling agent
Bit tip moves, bore hole is not circular	• Hard material in the workpiece • Unequal length of the cutting spiral or angles in the bit • Bit deformed	• Replace bit
Defective bit	• Not support used	• Place a wooden board beneath the workpiece and secure them one another
Bit running off-centre or „hopping“	• Bit deformed • Bearings worn down in the spindle head • Bit badly secured • Drill chuck defective	• Replace bit • Have the bearings replaced • Secure the bit properly • Replace the drill chuck
Impossible to mount drill chuck or morse taper	• There is dirt, grease or oil on the inner conical surface or the drill chuck or on the conical surface of the drill spindle	• Clean surfaces well • Keep surfaces free of grease
Motor does not start	• Motor connected wrong • Defective fuse	• Have it checked by authorized personnel
Overheating of motor and lack of power	• Motor overloaded • Insufficient main voltage • Motor connected wrong	• Disconnect immediately and have it checked by authorized personnel • Have it checked by authorized personnel
Precision of the work deficient	• Heavy and unbalanced or twisted workpiece. • Inexact horizontal position of the workpiece holder	• Balance the piece statically and secure without straining • Adjust workpiece holder
Drill spindle does not return to its initial position	• Spindle restoring spring does not work properly • Locking pin is being introduced	• Check spindle restoring spring, replace it, if necessary • Pull out locking pin
The drill spindle may not be moved downwards.	• The locking pin is introduced • The drill depth setting is not released	• Pull out the locking pin • Release the drill depth setting

© 2014 US

Problem	Cause/possible effects	Solution
Spindle bearing over-heating	• Bearing worn down • Excessive pre-tension of the bearing • Working at high speeds for a long time	• Replace • Reduce bearing clearance in the fixed bearing • Reduce feed rate
Working spindle rattling on rough piece surfaces	• Excessive slack in bearing • Working spindle goes up and down • Adjustment strip loose • Chuck loose • Tool dull • Piece loose	• Readjust bearing slack or replace bearing • Readjust bearing slack (fixed bearing) • Adjust strip to the correct slack using the adjusting screw • Check, re-tighten • Sharpen or replace tool • Secure the piece properly

© 2014

9 Appendix

9.1 Copyright

© 2014

This document is copyright. All derived rights are also reserved, especially those of translation, re-printing, use of figures, broadcast, reproduction by photo-mechanical or similar means and recording in data processing systems, whether partial or total.

The company reserves the right to make technical alterations without prior notice.

9.2 Terminology/Glossary

Term	Explanation
Drift	Tool for removing the bit or the drill chuck from the drill spindle
Drill chuck	Fixture for holding the bit
Drill head	Upper part of the drilling machine
Drill sleeve	Fixed hollow shaft which runs in the drill spindle
Drill spindle	Shaft activated by the motor
Drilling table	Support surface, clamping surface
Morse taper	Taper of the bit or drill chuck
Spindle lever	Manual control for the drill feed
Keyless drill chuck	Manually tightenable bit holding fixture
Workpiece	Piece to be drilled or machined
Tool	Milling cutter, drill bit, countersink, etc.

9.3 LIMITED WARRANTY

***OPTIMUM ONE-YEAR LIMITED WARRANTY**. OPTIMUM, MODELS COVERED IN THIS MANUAL, ARE WARRANTED BY OPTIMUM TO THE ORIGINAL USER AGAINST DEFECTS IN WORKMANSHIP OR MATERIALS UNDER NORMAL USE FOR ONE YEAR AFTER DATE OF PURCHASE. ANY PART WHICH IS DETERMINED TO BE DEFECTIVE IN MATERIAL OR WORKMANSHIP AND RETURNED TO AN AUTHORIZED SERVICE LOCATION, AS OPTIMUM DESIGNATES, SHIPPING COSTS PREPAID, WILL BE, AS THE EXCLUSIVE REMEDY, REPAIRED OR REPLACED AT OPTIMUM OPTION. FOR LIMITED WARRANTY CLAIM PROCEDURES, SEE "PROMPT DISPOSITION" BELOW. THIS LIMITED WARRANTY GIVES PUR-CHASERS SPECIFIC LEGAL RIGHTS WHICH VARY FROM JURISDICTION TO JURISDICTION.*

***LIMITATION OF LIABILITY.** TO THE EXTENT ALLOWABLE UNDER APPLICABLE LAW, OPTIMUM LIABILITY FOR CONSEQUENTIAL AND INCIDENTAL DAMAGES IS EXPRESSLY DISCLAIMED. OPTIMUM LIABILITY IN ALL EVENTS IS LIMITED TO AND SHALL NOT EXCEED THE PURCHASE PRICE PAID.*

***WARRANTY DISCLAIMER.** A DILIGENT EFFORT HAS BEEN MADE TO PROVIDE PRODUCT INFORMATION AND ILLUSTRATE THE PRODUCTS IN THIS LITERATURE ACCURATELY; HOWEVER, SUCH INFORMATION AND ILLUSTRATIONS ARE FOR THE SOLE PURPOSE OF IDENTIFICATION, AND DO NOT EXPRESS OR IMPLY A WARRANTY THAT THE PRODUCTS ARE MERCHANTABLE, OR FIT FOR A PARTICULAR PURPOSE, OR THAT THE PRODUCTS WILL NECESSARILY CONFORM TO THE ILLUSTRATIONS OR DESCRIPTIONS. EXCEPT AS PROVIDED BELOW, NO WARRANTY OR AFFIRMATION OF FACT, EXPRESSED OR IMPLIED, OTHER THAN AS STATED IN THE "LIMITED WARRANTY" ABOVE IS MADE OR AUTHORIZED BY OPTIMUM.*

***Technical Advice and Recommendations, Disclaimer.** Notwithstanding any past practice or dealings or trade custom, sales shall not include the furnishing of technical advice or assistance or system design. OPTIMUM assumes no obligations or liability on account of any unauthorized recommendations, opinions or advice as to the choice, installation or use of products.*

***Product Suitability.** Many jurisdictions have codes and regulations governing sales, construction, installation, and/or use of products for certain purposes, which may vary from those in neighboring areas. While attempts are made to assure that OPTIMUM products comply with such codes, OPTIMUM cannot guarantee compliance, and cannot be responsible for how the product is installed or used. Before purchase and use of a product, review the product applications, and all applicable national and local codes and regulations, and be sure that the product, installation, and use will comply with them.*

Certain aspects of disclaimers are not applicable to consumer products; e.g., (a) some jurisdictions do not allow the exclusion or limitation of incidental or consequential damages, so the above limitation or exclusion may not apply to you; (b) also, some jurisdictions do not allow a limitation on how long an implied warranty lasts, consequently the above limitation may not apply to you; and (c) by law, during the period of this Limited Warranty, any implied warranties of implied merchantability or fitness for a particular purpose applicable to consumer products purchased by consumers, may not be excluded or otherwise disclaimed.

***Prompt Disposition.** A good faith effort will be made for prompt correction or other adjustment with respect to any product which proves to be defective within limited warranty. For any product believed to be defective within limited warranty, first write or call dealer from whom the product was purchased. Dealer will give additional directions. If unable to resolve satisfactorily, write to OPTIMUM at address below, giving dealer's name, address, date, and number of dealer's invoice, and describing the nature of the defect. Title and risk of loss pass to buyer on delivery to common carrier. If product was damaged in transit to you, file claim with carrier.*

Manufactured for OPTIMUM, LDS Industries, LLC, 930 W. National Ave. Addison, IL 60101, Tel.: 1-630-785-6437.

© 2014

CE

EC - Declaration of Conformity

Machinery Directive 2006/42/EC Annex II 1.A

The manufacturer / retailer:	Optimum Maschinen Germany GmbH Dr.-Robert-Pfleger-Str. 26 D- 96103 Hallstadt

hereby declares that the following product,

Type of machine:	Upright drilling machine
Type designation:	B30BS
Serial number:	_ __ __ __ __
Year of manufacture:	20__

Manual upright drilling machine with frequency converter for private persons as well as for craft and industrial plants which meets all the relevant provisions of the above mentioned Directive 2006/42/EC as well as the other directives applied (below) including their amendments in force at the time of declaration. The following other EU Directives have been applied: EMC Directive 2014/30/EC, Low Voltage Directive 2006/95/EC

The safety objective meet the requirement of EC Directive 2006/95/EC

The following harmonized standards were applied:

EN 1037:1995+A1:2008 Safety of machinery - Prevention of unexpected start-up

EN ISO 14119 Safety of machinery - Interlocking devices associated with guards - Principles for design and selection

EN 12717:2001+A1:2009 Safety of machine tools - Drilling machines

EN 1837:1999+A1:2009 Safety of machinery - Integral lighting of machines

EN 50581:2012 Technical documentation for the assessment of electrical and electronic products with respect to the restriction of hazardous substances

EN 60204-1:2006/AC: 2010 Safety of machinery - Electrical equipment of machines - Part 1: General requirements (IEC 60204-1:2005 (modified))

EN 61000-6-2:2005/AC:2005 Electromagnetic compatibility (EMC) - Part 6-2: Generic standards - Immunity for industrial environments (IEC 61000-6-2:2005)

EN 61000-6-4:2007 Electromagnetic compatibility (EMC) - Part 6-4: Generic standards - Emission standard for industrial environments (IEC 61000-6-4:2006)

DIN EN 55011 class A: 2003-08 Industrial, scientific radio-frequency equipment

EN ISO 12100:2010 Safety of machinery - General principles for design - Risk assessment and risk reduction (ISO 12100:2010)

EN ISO 13857:2008 Safety of machinery - Safety distances to prevent hazard zones being reached by upper and lower limbs

Responsible for documentation: Kilian Stürmer, phone: +49 (0) 951 96555 - 800

Address:	Dr.-Robert-Pfleger-Str. 26 D- 96103 Hallstadt

Kilian Stürmer
(CEO, General manager)

Hallstadt, 2011-12-28

Index

A
Assembly 18
C
Classification of hazards 5
Control and indicating elements 26
Control panel 28
Copyright 62
Cutting speeds 37
D
Digital drill depth display 27
E
Electrical connection 15
EMERGENCY stop button 11
F
First use 25
L
LIMITED WARRANTY 63
Loosen V-belt tension 32
M
Maintenance 40
Mounting
    drill chuck 34
O
Obligations
    Operator 8
    User 9
Operating material 16
Other pictograms 6
P
Power supply 25
Proper use 7
Q
Qualification of employees 8
R
Removing
    drill chuck 32
S
Safety
    during maintenance 13
    during operation 12
Safety check 10
Safety devices 9
Safety warnings 5
Scope of delivery 18
Selector switch
    operating mode 28
    turning direction 29
Speed change 30
Speed table 31
Speeds 15
Spindle 15
Storage 19
Switching off the machine 30
Switching on the machine 29
T
Table cutting speeds 37
Table cutting speeds / infeed 37
Technical data 15
Transport 18
Troubleshooting 60
W
Warnings 5

© 2014